CITY OF MINERAL WELLS

DESIGN STANDARDS

1995

CITY OF MINERAL WELLS

DESIGN STANDARDS

Table of Contents

ARTICLE I - STREETS Page

Section 1.1 - General 2
1.2 - Rigid Pavement 2
1.3 - Flexible Pavement 10
1.4 - Quality Control 16
1.5 - Pavement Widths and Right-of-Way Widths . . . 17
1.6 - Street Grades 18

ARTICLE II - STORM DRAINAGE 21

Section 2.1 - Standard Provisions 22
2.2 - Responsibility of Owner or Developer for Storm Drainage 24
2.3 - Engineering Design 26

ARTICLE IIA - DESIGN GUIDELINES FOR SIZING DETENTION PONDS

Section 2A.1 - General 37
2A.2 - Minimum Tract Size 37
2A.3 - Drainage Plan 37
2A.4 - Street Drainage 38
2A.5 - Small Urban On-Site Drainage Ponds 38

ARTICLE III - WATER SYSTEM 50

Section 3.1 - General 51
3.2 - Line Size 51
3.3 - Pipe Material 51
3.4 - Fittings 51
3.5 - Fire Hydrants 52
3.6 - Gate Valves 52
3.7 - Testing and Sterilization 53
3.8 - Location and Installation 53

ARTICLE IV - SEWER SYSTEM 54

Section 4. 1 - General 55
4. 2 - Pipe Sizes and Grades 55
4. 3 - Pipe Material 55
4. 4 - Manholes 55
4. 5 - Drop Manholes 55
4. 6 - Cleanouts 56
4. 7 - Services 55
4. 8 - Force Main 56
4. 9 - Lift Station 56
4.10 - Testing 56
4.11 - Location and Installation 56

APPENDIX A - Engineering Standard Details 58

APPENDIX B - Engineering Charts and Reference Data 107

References

ARTICLE I

CITY OF MINERAL WELLS

DESIGN STANDARDS
FOR
STREETS

ARTICLE I

STREETS

SECTION 1.1 General

Design Standards

1. The purpose of this section is to establish minimum standard criteria, principles, procedures and practices for design of rigid and flexible pavements and is not to replace the independent judgement and responsibility of the design engineer.

2. The design factors, formulas, graphs and procedures presented or referred to herein are intended for use as minimum engineering guides in the design of rigid and flexible pavements.

3. Methods of design other than those indicated or referred to herein may be considered in complex and difficult cases where experience clearly indicates they are preferable; however, these deviations shall not be attempted until approval has been obtained from the City Administrative Officer or his duly authorized designee. If existing conditions are determined that require greater than the minimum design, it is the responsibility of the design engineer to design accordingly.

4. The methods outlined or referred to herein include accepted principles of pavement thickness design and should be a working supplement to basic design information obtainable from test books and publications on pavement design.

5. The engineer responsible for the design of the proposed improvements shall submit testing reports performed by the engineer of an independent testing laboratory with a verification statement to the City Administrative Officer that the improvements have been constructed in accordance with the plans and specifications.

SECTION 1.2 Rigid Pavement

Rigid Pavement Thickness Design Procedure - The pavement thickness shall be designed as simply reinforced concrete pavements.

Flexural Strength of Concrete - Flexural strength of concrete (modulus of rupture, MR) is applicable in design procedure for fatigue criterion, which controls cracking of pavement under repetitive truck loadings. A design MR of 40 psi and concrete compressive strength of 3,000 psi at 28 days shall be used in the rigid pavement thickness calculations.

Subgrade Support - The subgrade support given to concrete pavements is defined as the modulus of subgrade reaction (k) in psi per inch and shall be used in the design of the concrete pavement thickness.

To determine the modulus of subgrade reaction (k), the developer's engineer shall furnish the following information along with the pavement thickness calculations.

1. The developer shall have an independent soil laboratory approved by the City, sample the subgrade soils to determine the major soil classifications based on the Unified Soil Classification System as defined in ASTM D-2487.

2. Samples shall be taken at least once per block or every 500 feet, whichever is less, with a minimum of three (3) samples per project.

3. The developer's engineer may use the assigned California Bearing Ration (CBR) values listed below for the soil classifications, in lieu of performing the CBR tests.

ASSIGNED CBR VALUES

Soil Classification	CBR Value
CH	3 (If PI = 30 modify)
CL	6
SC	12
SM	12
SP	15
ML	6
SW	20
GC	20 for -200 <=15% 12 for -200 <=20%
GM	20 for -200 <=15% 12 for -200 <=20%
GP	25
GW	30

4. When CBR tests as determined by ASTM D-1883 are performed on each classification of the raw subgrade soil, and when only one CBR test is performed, the CBR value shall be reduced by 20%. If two (2) CBR tests are performed, the average of the two CBR rests shall be reduced by 10%. If three (3) or more CBR tests are performed, the average of the CBR values shall be used.

   For dual classifications (CL, CH), use the assigned CBR value of single classification which results in the lower CBR, or

perform CBR tests.

Where a higher CBR soil overlies a lower CBR soil, the higher CBR value shall not be used unless the higher CBR soil will have a minimum thickness of twenty-four (24) inches in the prepared subgrade.

5. Soil stabilization under concrete pavements shall not be required if the CBR of the soil is five (5) or greater. The subgrade shall be scarified to a depth of eight (8) inches and recompacted to no less than 100% of maximum dry density with a moisture content within two (2) percentage points dry to three (3) percentage points wet of optimum moisture content, as determined by ASTM D-698, Standard Proctor.

6. Soil stabilization shall be required under concrete pavements if the CBR of the subgrade soil is less than five (5). A minimum of six (6) percent lime or cement shall be used to modify the subgrade soil. The top eight (8) inch lift of stabilized soil may be assigned a maximum CBR value of 20.

   At the developer's option, CBR tests may be performed on the subgrade soils with the six (6) percent lime or cement as determined by ASTM D-3668. If only one CBR test is performed, the CBR value shall be reduced by 20%. If two (2) CBR tests are performed, the average of the two CBR tests shall be reduced by 10%. If three or more CBR tests are performed, the average of the CBR values shall be used.

   The stabilized subgrade shall be recompacted to no less than 100% of maximum dry density with a moisture content within two (2) percentage points dry to three (3) percentage points wet of optimum moisture content, as determined by ASTM D-698, Standard Proctor.

7. The in-place density of all classifications of compacted earth fill shall be no less than 95% of maximum dry density as determined by ASTM D-698, Standard Proctor, the exception being the top twelve (12) inches of fill underneath roadways. This earth fill shall be compacted to no less than 100% of maximum dry density with a moisture content within two (2) percentage points dry to three (3) percentage points wet of optimum moisture content, as determined by ASTM D-698, Standard Proctor.

Geotextile - Soil Stabilization - The geotextile shall be a nonwoven fabric consisting only of continuous chain polymer filaments or yarns of polyester, formed into a stable network by needle punching. The fabric shall be inert to commonly encountered chemicals, hydrocarbons, mildew and rot resistant, resistant to ultraviolet light exposure, insect and rodent resistant, and conform to the properties in Table 1.1. The average roll minimum value (weakest principle direction) for strength properties of any individual roll tested from the manufacturing lot or lots of a particular shipment shall be in excess of the average roll minimum (weakest principle direction) stipulated herein.

Geotextile shall be TREVIRA S1125, Quline Q100 or approved equivalent.

The geotextile shall be installed on the prepared subgrade. Overlaps, when necessary, shall be thirty-six (36) inches minimum. The aggregate shall be back dumped onto the fabric and spread in a uniform lift always maintaining the design aggregate thickness. Construction vehicles will not be allowed to traffic directly on the fabric.

Overstressing the soil shall be avoided by using equipment in spreading and dumping that exerts only moderate pressure on the soil. Severe rutting at the time of placement is an indication of overstressing the soil. Such soil overstressing must be avoided. Increasing the aggregate depths and reducing loads are two methods of reducing the pressures on the soil.

Any ruts which develop during spreading or compacting shall be filled with additional aggregate rather than blading from surrounding areas.

Table 1.1

Geotextile Test Requirement

Physical Properties (Weakest Principle Direction)	Average Roll Minimum Value
Grab Tensile Strength ASTM D1682 (Lbs.)	200
Elongation At Failure ASTM D1682 (%)	60
Mullen Burst Strength ASTM D3786 (PSI)	320
Water Flow Rate (gal/min/sq.ft.) (5 in. constant head) (ASTM D4491)	100
Apparent Opening Size (A.O.S.) (U.S. Standard Sieve No.) CW-02215 U.S. Std. Sieve Number larger than	70
Trapezoid Tear Strength ASTM D1117	60
Puncture Strength ASTM D751 (modified) Lbs.	80

Subgrade Drainage - Providing for subgrade drainage is imperative for a successful pavement design section includes elements to provide subgrade drainage. A geotextile shall be used in conjunction with a six-inch uniform graded crushed stone aggregate base (drainage course) for subgrade drainage. The geotextile will also provide separation, reinforcement and filtration for the subgrade.

The geotextile shall be placed between the subgrade and drainage course. The geotextile separates these two courses, preventing the aggregate from being lost by intrusion down into the subgrade and preventing the soil fines from pumping up into the aggregate base. The geotextile will also provide additional reinforcement to the subgrade by spreading the load over the subgrade and confining the aggregate in the base course. The filtration function of the geotextile acts to allow free flow of water, normal to the plane of the fabric, from the subgrade into the aggregate base course. This allows the flow of water out of the pavement structure while preventing the loss of soil from the subgrade. The geotextile also supplements the aggregate base course in draining water out of the pavement structure by allowing free water flow in the plane of the fabric while preventing loss of soil from the subgrade. The basis for the use of geotextiles in pavement structures is presented in "Design of Flexible Pavements with Geotextiles", (Ref.2), which is

also applicable to rigid pavements constructed on crushed stone drainage courses.

Drainage Course - One of the following standard aggregate gradations, ASTM D-448 size No. 57 or No. 67, shall be used as the drainage course. The drainage course thickness shall be six (6) inches. When a drainage course is required, a geotextile shall be used.

The aggregate drainage course shall be placed in one lift over the geotextile. The drainage course shall receive a minimum of eight (8) passes with a 10 ton, steel-wheeled vibratory roller. The drainage course requires rolling for density and stabilization but does not require specific compaction criteria.

No aggregate drainage course shall be required when the subgrade has a Unified Soil Classification of GW, GP, SW, or SP, provided the subgrade has a means of draining to daylight or is significantly thick.

Composite CBR Value - The CBR value to be used to determine the modulus of subgrade reaction (K) value shall be the composite CBR value. The composite CBR for rigid pavement shall be determined as follows:

1. Condition No. 1. - Raw subgrade CBR value greater than five (5).

   A maximum CBR value of sixty 60 shall be assigned to the six (6) inch thick drainage course.

   The raw subgrade CBR or Geomod CBR value (Geomod CBR, as determined in Total Pavement Thickness Design in Section 1.3, the raw subgrade CBR is ten (10) or less) shall be multiplied by three (3) and this value added to the drainage course CBR value of 60 and divided by two (2) to obtain the composite CBR value.

2. Condition No. 2 - Raw Subgrade CBR value is five (5) or less.

   The raw subgrade CBR is multiplied by two (2), then added to the stabilized subgrade CBR of twenty (20) (or CBR value obtained from actual CBR tests) and divided by two (2). This value shall be multiplied by three (3) and shall be added to the drainage course CBR of sixty (60) and divided by two (2) to obtain the composite CBR value. When an aggregate drainage course is not required, the Composite CBR shall be the CBR of the raw subgrade as determined above, without the multiplier of three (3). The CBR value of the subgrade soils shall be correlated to the modulus of subgrade reaction (k) in psi per inch. Approximate values of (k) can be obtained from Figure 2, in Portland Cement Association's (PCA) publication, "Thickness Design for Concrete Highway and Street Pavements", (Ref. 1). If the composite CBR is greater than sixty (60), the modulus of subgrade reaction (k) value to be used shall be

600 psi.

Design Period - The design period shall be 20 years. The intersections of two (2) primary thoroughfares, two (2) secondary thoroughfares, a primary thoroughfare and a primary collector and a primary thoroughfare and a secondary thoroughfare shall be designed for 40 years.

Traffic - The average daily truck traffic (ADTT) shall be estimated as outlined in the PCA publication, "Thickness Design for Concrete Highway and Street Pavements", (Ref. 1) and used to design the pavement thickness for primary and secondary thoroughfare streets and collector streets. The volume of truck traffic anticipated for a local street shall be based upon twice the number of solid waste truck trips expected during the design period. The number of truck trips is defined as the number of times during the design period that the solid waste is collected for a residence located on the local street being designed, (i.e., two collections per week for 20 years equals 2,090 truck trips). A twenty (20) kilo pound (kip) single axle load with dual wheels shall be used for the solid waste trucks when designing the pavement thickness of the local streets.

Subdrainage System for Roadways - All roadways with storm drain collection systems shall provide for subgrade drainage as follows:

The drainage aggregate for the subdrains shall be the same aggregate as specified for the drainage course.

The geotextile shall be specified above for Geotextile - Soil Stabilization.

The drainage pipes shall be a maximum of four (4) inches in diameter, sized for flow rates of 0.025 cfs per 1000 square feet of pavement surface due to infiltrate. Clean outs shall be installed at a maximum of 250 feet intervals. The drainage pipes shall connect to stormdrain systems or drainage channels at maximum intervals of 500 feet.

The pipe, fittings and connections shall be PVC conforming to ASTM D-17894 and D-2241, 160 psi rating. All joints and fittings shall be rubber gasket type.

The perforated drainage pipe shall have 3/8 inch diameter holes at four inches on center in two rows, one on either side of the vertical centerline, and shall be separated on the bottom of the pipe by an arc of 120 degrees.

The drainage aggregate shall be compacted in four inch layers with a vibratory plate power hand compactor. Each lift shall be compacted with a minimum of eight passes of the compactor.

The drainage pipe shall be installed in conjunction with the drainage aggregate in such a manner that will prevent damage to the pipe and will not interfere with compaction of the aggregate. Prior to installation, the vertical centerline shall be marked on the top of each section of perforated pipe, with a waterproof felt-tipped marker or other suitable device, to facilitate verification that the perforations are properly oriented. Fittings of the proper type shall be provided at all bends and junctions in the drainage pipe.

All roadways which require an aggregate drainage course and do not contain a storm drain collection system shall provide subgrade drainage as follows:

> The geotextile and aggregate drainage course shall "daylight" at each existing drainage-way along the proposed roadway.

Pavement Thickness Design - All concrete street pavement thickness shall be designed for simple reinforced concrete pavements. The procedures outlined in the PCA publication, "Thickness Design for Concrete Highway and Street Pavements", (Ref.1) shall be followed. The Design Factors noted above shall be used when determining the concrete pavement thickness.

Joint Design - Joints are required in rigid pavements to allow for expansion of the slab, reduce the stresses and cracking caused by warping, reduce the amount of shrinkage cracking and provide a means of interim termination of the concrete placing operation during construction. Accordingly, expansion joints, longitudinal contraction (warping) joints, transverse contraction joints and construction joints shall be required. General joint details are shown on the attached plates.

1. **Expansion Joints** - Expansion joints shall be provided at intersections, where the pavement abuts a structure and otherwise at intervals not to exceed 600 feet.

2. **Longitudinal Contraction (Warping) Joints** - Longitudinal contraction shall be provided at approximately each twelve (12) feet of pavement width or between lanes. These joints generally shall be of the saw-cut (dummy) joint type similar to those shown on the attachments except where wide pavements require the use of longitudinal construction joints.

3. **Transverse Contraction Joints** - Transverse contraction joints shall normally be placed at intervals approximately equal to the pavement width. <u>No bonded reinforcement</u> shall extend across transverse contraction joints. Saw-cut dowelled transverse contraction joints as shown on the attached plates shall be used.

4. **Longitudinal Construction Joints** - Longitudinal construction joints shall be required where the pavement width exceeds twenty-four (24) feet. These joints shall be tied with deformed bars as shown on the attachments.

5. **Transverse Construction Joints** - Transverse construction joints shall be minimized. The pavement shall be placed in one pour between expansion joints, where practical, with transverse construction joints being used only for emergency termination of the pavement placing operation. Transverse construction joints where unavoidable shall be used in place of a transverse contraction joint. Typical construction joint details are shown on the attached plates.

6. **Smooth Steel Dowels** - Smooth steel dowels shall be used for load transfer devices at expansion and contraction joints. The dowels shall be designed as outlined in "Principles of Pavement Design" by E.J. Yoder and M.W. Wiczak, (Ref. 3). The length of dowel embedment in the concrete shall be nine (9) inches.

Reinforcing Design - Distribution reinforcement in the transverse and longitudinal direction shall be designed as outlined in "Principles of Pavement Design" by E.J. Yoder and M.W. Wiczak, (Ref. 3). Typical reinforcement details are shown on the attached plates.

SECTION 1.3 Flexible Pavement

Flexible Pavement Thickness Design Procedures - The pavement thickness shall be designed for an improved subgrade CBR value of not less than seven (7) and the probable truck traffic anticipated during the design period.

Subgrade Support - The composite CBR value shall be used to determine the load carrying capacity of the subgrade. The developer's engineer shall furnish the subgrade soil information described above, under Subgrade Support for Flexible Pavement, along with the pavement thickness calculations.

The developer may select to stabilize the raw subgrade with a minimum of six (6) percent lime or cement to modify the subgrade soil. The top eight (8) inches of the subgrade soil shall be stabilized. This eight (8) inch lift of stabilized soil may be assigned a maximum CBR value of twenty (20).

At the developers option, CBR tests may be performed on the subgrade soils with the six (6) percent lime or cement as determined by ASTM D-3668. If only one CBR test is performed, the CBR value shall be reduced by 20%. If two (2) CBR tests are performed, the average of the two CBR tests shall be reduced by 10%. If three (3) or more CBR tests are performed, the average of the CBR values shall be used.

The stabilized subgrade shall be recompacted to no less than 100%

of maximum dry density with a moisture content within two (2) percentage points dry to three (3) percentage points wet of optimum moisture content, as determined by ASTMN D-698, Standard Proctor.

When the subgrade soil is stabilized, a composite CBR value shall be determined as follows:

> The raw subgrade CBR is multiplied by two (2) then added to the stabilized subgrade CBR of twenty (20), (or CBR value obtained from actual CBR tests) and divided by two (2) to obtain the composite CBR value. The composite CBR is used to determine the Total Design Thickness from Figure 2 in Appendix B, as described later in Total Pavement Thickness Design.

Design Period - The design period shall be twenty (20) years.

The intersections of two (2) primary thoroughfares, two (2) secondary thoroughfares, a primary thoroughfare and a primary collector and a primary thoroughfare and a secondary thoroughfare shall be designed for 40 years.

Traffic - Traffic counts by vehicle type shall be used when available. The vehicle types shall be grouped as follows:

Group 1 - Passenger cars, panel and pickup trucks.
Group 2 - Two-axle trucks loaded or larger vehicles apparently carrying light cargoes.
Group 3 - Truck or combination vehicles having three, four, or more loaded axles.

Traffic count information on each vehicle type shall be converted to equivalent axle loads of 18 kips, (designated EAL), by using Figure 1, in Appendix B. Figure 1 was taken from the National Stone Association's FLEXIBLE PAVEMENT DESIGN GUIDE FOR ROADS AND STREETS, (Ref. 4).

When traffic count information is not available, Table 1.2 which defines six Design Index categories for traffic shall be used. The Design Index (DI) Numbers shown in Table 1.2 are based on descriptions in U.S. Army Technical Manuals and were taken from the National Stone Association's DESIGN GUIDE FOR PARKING AREAS, (Ref. 5).

Table 1.2

Design Index Categories for Traffic

Design Index	General Character	Daily EAL
DI-1	**Local Streets** - Light traffic (few vehicles heavier than passenger cars, no regular use by Group 2 or 3 vehicles).	5 or less
DI-2 and DI-3	**Collector Streets** - Medium traffic (maximum 3,000 VPD, including not over 10% Group 2 and 3, and 1% Group 3 vehicles).	21 - 75
DI-4	**Secondary Thoroughfare** - Medium-heavy traffic (maximum 6000 VPD, including not over 15% Group 2 and 3, and 1% Group 3 vehicles).	76 - 250
DI-5	**Primary Thoroughfare** - Heavy Traffic (maximum 6,000 VPD, may include 25% Group 2 and 3, and 10% Group 3 vehicles).	251 - 900
Notes:	EAL = equivalent 18 kip axle loads in design lane, average daily use over life expectancy of 20 years with normal maintenance. VPD = vehicles per day, all types, using design lane.	

Total Pavement Thickness Design - The National Stone Association (NSA) design method, outlined in DESIGN GUIDE FOR PARKING AREAS, (Ref. 5), shall be used to determine the total flexible pavement thickness. This method uses a thickness design chart, Figure 2 in Appendix B, developed by the U.S. Army Corps of Engineers. The total design thickness of the pavement shall be selected from Figure 2 based upon the improved subgrade CBR and the traffic design index, and shall be a minimum of eight (8) inches. All flexible pavement structures shall include geotextile for soil stabilization, separation and filtration.

When the subgrade CBR is greater than ten (10), the Total Design Thickness selected from Figure 2 will be used to determine the pavement section.

When the subgrade is relatively weak (CBR between two (2) and ten (10), a geotextile for soil stabilization shall be used. The NSA method based upon the subgrade CBR and Traffic Design Index does not take into consideration the use of a geotextile for soil stabilization. An apparent improved CBR (Geomod) value can be determined from Figure 3 in Appendix B. Figure 3 was taken from DESIGN OF FLEXIBLE PAVEMENTS WITH GEOTEXTILES, (Ref. 2). The

Geomod CBR value can be used to determine the total design thickness of the pavement with a geotextile, when the raw subgrade CBR is between two (2) and ten (10).

A Total Design Thickness with a geotextile for soil stabilization shall be selected from Figure 2 based upon the Geomod CBR and the Traffic Design Index.

Pavement Drainage - Proper internal drainage of the pavement structure is of utmost importance. The subgrade shall be graded for positive drainage to the roadway subdrainage system. The geotextile and aggregate base course shall "daylight" to drainage channels or subsurface drain systems which exit to stormdrain systems or a drainageway. The aggregate base course is the total pavement thickness less the asphalt concrete surface course thickness. When the aggregate base thickness is eight (8) inches or more, it shall consist of a lower drainage course of uniform size free draining stone and an upper course of well-graded aggregate base material.

Subdrainage System for Roadways - All flexible pavement roadways shall provide for subgrade drainage as outlined in Subdrainage System for Roadways in Section 1.2.

Drainage Course - The drainage course serves two purposes; providing free flow of water out of the pavement structures and a working surface for protection and pre-tensioning of the geotextile. One of the following standard aggregate gradations, ASTM D-448 size No. 57 or No. 67 shall be used as the drainage course. The minimum drainage course thickness shall be five (5) inches when the total aggregate base thickness is eight (8) inches and a minimum of six (6) inches when the total aggregate base thickness is nine (9) inches or greater. A geotextile is required for all flexible pavement structures.

The aggregate drainage course shall be required when the subgrade has a Unified Soil Classification of GW, CP, SW or SP, provided the subgrade has a means of draining to daylight or is significantly thick.

Well-Graded Aggregate Base (Flexible Base) - The well-graded aggregate base shall consist of a well graded, low P.I. crushed stone material. This aggregate shall have a maximum of twelve (12) percent passing the number 100 sieve by the wet sieve method to provide for better drainage. The "flexible base" gradation from the Texas State Department of Highways and Public Transportation, (Ref. 6) specification for Type A-Grade 1 material shall be used for the well-graded aggregate base. The well-graded base course provides a smoother, more cohesive surface which accommodates shaping to closer surface tolerances and provides a good surface for placement of the asphalt concrete surface course.

Placement of the well-graded aggregate base course shall follow immediately behind the aggregate drainage course. This course shall be rolled with a minimum of eight (8) passes with the 10 ton

steel-wheeled vibratory roller and shall be compacted to a minimum density of 100% of maximum dry density, near optimum moisture content, as determined by ASTM D-1557, modified Proctor. Close observation and compaction control shall be performed.

Where the total design thickness of the aggregate base course is less than eight (8) inches, a single layer of well-graded aggregate shall be used. The well-graded aggregate will serve as the drainage course except when the subgrade has a unified Soil Classification of GW, GP, SW, or SP. Where the well-graded aggregate course serves as the drainage course, the gradation requirements shall be changed to allow a maximum of three (3) percent passing the number 100 sieve by the wet sieve method.

Aggregates retained on the number 4 sieve shall consist of durable, angular crushed stone particles and shall have a percentage of wear of not more than fifty (50) when tested in accordance with ASTM Method C-131 and a maximum of fifteen (15) percent loss when subjected to five (5) cycles of the sodium sulfate soundness test in accordance with ASTM Method C-88.

Where only one aggregate base course is used, the installation procedure shall proceed similar to that described above. If the composition of the aggregate base material is not suited for Proctor methods of density control, another recognized, acceptable method (such as percent of maximum theoretical density) shall be used. Any deformations in the surface of either aggregate base course which occur during placement shall be filled with additional aggregate during the compaction process rather than reblading aggregate into the depressions from the adjacent surfaces.

Geotextile - Soil Stabilization - The geotextile shall be a nonwoven fabric consisting only of continuous chain polymer filaments or yarns of polyester, formed into a stable network by needle punching. The fabric shall be inert to commonly encountered chemicals, hydrocarbons, mildew and rot resistant, resistant to ultraviolet light exposure, insect and rodent resistant, and conform to the properties in Table 1.3. The average roll minimum value (weakest principle direction) for strength properties of any individual roll tested from the manufacturing lot or lots of a particular shipment shall be in excess of the average roll minimum (weakest principle direction) stipulated herein.

Geotextile shall be TREVIRA S1125, Quline Q100 or an approved equivalent.

The geotextile shall be installed on the prepared subgrade. Overlaps, when necessary, shall be thirty-six (36) inches minimum. The aggregate shall be back dumped onto the fabric and spread in a uniform lift always maintaining the design aggregate thickness. Construction vehicles will not be allowed to traffic directly on the fabric.

Overstressing the soil shall be avoided by using equipment in spreading and dumping that exerts only moderate pressures on the

soil. Severe rutting at the time of placement is an indication of overstressing the soil. Such soil overstressing must be avoided. Increasing the aggregate depths and reducing loads are two methods of reducing the pressures on the soil.

Any ruts which develop during spreading or compacting shall be filled with additional aggregate rather than blading from surrounding areas.

Table 1.3

Geotextile Test Requirements

Physical Properties (Weakest Principle Direction)	Average Roll Minimum Value
Grab Tensile Strength ASTM D1682 (Lbs.)	200
Elongation At Failure ASTM D1682 (%)	60
Mullen Burst Strength ASTM D3786 (PSI)	320
Water Flow Rate (gal/min/sq.ft.) (5 in. constant head) (ASTM D4491)	100
Apparent Opening Size (A.O.S.) (U.S. Standard Sieve No.) CW-02215 U.S. Std. Sieve Number larger than	70
Trapezoid Tear Strength ASTM D1117	60
Puncture Strength ASTM D751 (modified) Lbs.)	80

Asphalt Concrete Surface Course - Asphalt concrete surface course thicknesses shown in Table 1.4 were taken from National Stone Association's FLEXIBLE PAVEMENT DESIGN GUIDE FOR ROADS AND STREETS, (Ref. 4). Table 1.4 presents the minimum hot mix asphaltic concrete surface course thickness based upon the Traffic Design Index.

The hot mix asphaltic concrete surface course shall comply in all respects to ITEM 340, "Hot Mix Asphaltic Concrete" of the STANDARD SPECIFICATIONS FOR CONSTRUCTION OF HIGHWAYS, STREET, AND BRIDGES, as adopted by the STATE DEPARTMENT OF HIGHWAYS AND PUBLIC TRANSPORTATION, (Ref. 6), FOR TYPE "D".

All course graded binder course shall conform to Type "A", (coarse Graded Base Course) as specified in the STANDARD SPECIFICATIONS FOR CONSTRUCTION OF HIGHWAYS, STREETS AND BRIDGES, (Ref. 6).

Table 1.4

Hot Mix Asphaltic Concrete Thickness

Traffic Design Index	Hot Mix Asphaltic Concrete Thickness (inches)	
	Type "D" (Fine Graded)	Type "A" (Course Graded)
DI-1	1.5	----
DI-2	2.0	----
DI-3	1.0	1.5
DI-4	1.0	2.0
DI-5	1.0	2.5

An RC-2 prime coat shall be applied at a rate of 0.25 gallons per square yard to the aggregate base course prior to the placement of the hot mix asphaltic concrete.

A type RC-2 tack coat shall be applied to each layer of asphaltic concrete before the next layer is applied. The tack coat shall also be applied to any exposed concrete edges that will abut any hot mix asphaltic concrete. The tack coat shall be applied to each layer at a rate not to exceed 0.05 gallons per square yard of surface.

The hot mix asphalt concrete courses, including prime and tack coats, shall follow closely behind the completion of the aggregate base courses. The placement methods and density of the asphalt concrete shall be closely monitored and controlled by marshall density, or percent of maximum theorectical density. Compaction of the hot mix asphaltic concrete shall be as specified in ITEM 340 STANDARD SPECIFICATIONS FOR CONSTRUCTION OF HIGHWAYS, STREETS AND BRIDGES, (Ref. 6).

SECTION 1.4 Quality Control

Table 1.5 lists the types of tests and frequency that shall be performed by the testing laboratory approved by City.

Table 1.5

Quality Control Testing Requirements

Area to be Tested	Frequency
Concrete Pavement	
Moisture and Density Tests Scarified and Recompacted Subgrade	Min. 3 per 500 feet
Compacted Earth Fill Subgrade	Min. 3 per 500 feet per 8 inch lift
Thickness Verification of Total Pavement Structure*	Min. 3 per 500 feet
Concrete Compressive Strength	3 per 50 C.Y. Min. 3 per day
Asphalt Concrete Pavement	
Moisture and Density Tests Scarified and Recompacted Subgrade	3 per 500 feet
Compacted Earth Fill Subgrade	Min. 3 per 500 feet per 8 inch lift
Moisture and Density Tests of Well-graded Aggregate Base (Flexible Base)	Min. 3 per 500 feet
Marshall Density of Asphaltic Concrete	Min. 3 per 500 feet
Thickness Verification of Total Pavement Structure*	Min. 3 per 500 feet

*Field observations during construction, conducted by City personnel, may be substituted in lieu of thickness verification tests.

SECTION 1.5 Pavement Widths and Right-of-Way Widths

Pavement Widths and Right-of-Way Widths - Pavement widths shall be measured from the back of one curb to the back of the other curb. The minimum widths of pavement and right-of-way shall conform to the adopted Comprehensive Plan and Subdivision Ordinance; and pavement sections shall conform to the design details of the City. These widths are summarized in Table 1.6.

The alignment and design of streets should be such that collector streets have a safe running speed of 50 miles per hour, and residential streets have a safe running speed of 40 miles per hour.

Table 1.6

Minimum Widths of Paving and Right-of-Way

Street Classification	Minimum Paving Width*	Minimum Right-of-Way Width
Primary Thoroughfare	25' with 20' median	120'
Secondary Thoroughfare	25' with 11' median	90'
Collector	45'	70'
Local Street	31'	50'

*Paving on primary and secondary thoroughfares consist of two (2) paving sections with a median.

SECTION 1.6 Street Grades

Thoroughfares and Collector streets may have a maximum grade of seven and one-half (7½) percent. Residential streets may have a maximum grade of ten percent, unless otherwise approved by the City where the natural topography is such as to require steeper grades. All streets must have a minimum grade of at least five-tenths (5/10) of one (1) percent. Centerline grade changes with an algebraic difference of more than one (1) percent shall be connected with vertical curves in compliance with the minimum length requirements set forth in Table 1.7.

Table 1.7

Minimum Length of Vertical Curves - in Feet

Crest Vertical Curves

Algebraic Difference In Grade - Percent	Design Speed		
	30 MPH	35 MPH	40 MPH
1.0	100	100	100
2.0	100	100	120
3.0	100	120	180
4.0	120	160	240
5.0	150	200	300
6.0	180	240	360
7.0	210	280	420
8.0	240	320	480
9.0	270	360	540
10.0	300	400	600

Sag Vertical Curves

Algebraic Difference In Grade - Percent	Design Speed		
	30 MPH	35 MPH	40 MPH
1.0	100	100	100
2.0	100	100	120
3.0	120	150	180
4.0	160	200	240
5.0	200	250	300
6.0	240	300	360
7.0	280	350	420
8.0	320	400	480
9.0	360	450	540
10.0	400	500	600

SECTION 1.7 Street Lights

In general, lights should be located on metal or fiberglass poles at street intersections and at intervals no greater than 500 feet apart. Street lights should be the equivalent of 9,500 lumens high pressure sodium fixtures on minor residential streets. All collector streets and thoroughfares shall have high pressure sodium fixtures with an equivalent of 27,500 lumens. The City reserves the right to inspect the street lighting construction. In any event, a street light will be required at each cul-de-sac.

ARTICLE II

CITY OF MINERAL WELLS

DESIGN STANDARDS
FOR
STORM DRAINAGE

ARTICLE II

STORM DRAINAGE

SECTION 2.1 Standard Provisions

Standard Provisions

All construction for storm drainage in the development or improvement of property within the City of Mineral Wells shall conform to the following standards and requirements:

1. Storm sewer inlets shall be provided along paved streets at such intervals as are necessary to limit the depth of flow as follows:

   Residential Streets - Based on parkway slopes of 1/4 inch per foot behind the curb, the 100 year Design Frequency flows shall not exceed a depth of 0 inches over the top of the curb.

   Collector Streets - Based on parkway slopes of 1/4 inch per foot behind the curb, the 100 year Design Frequency flow shall not exceed the elevation of the lowest top of curb.

   Arterials - Based on a transverse slope of 1/4 inch per foot on the pavement, the 100 year Design Frequency flow shall not exceed the elevation of the lowest top of curb.

   Alleys - The 100 year Design Frequency flows shall not exceed the capacity of the alley sections.

   Positive Overflow - The approved drainage system shall provide for positive overflow at all low points. The term "positive overflow" means that when the inlets do not function properly or when the design capacity of the conduit is exceeded, the excess flow can be conveyed over land along a concrete paved course. Normally, this would mean along a street or alley, but can require the dedications of special drainage easements on private property.

2. A closed storm sewer system shall be required to accommodate a runoff exceeding the street capacity, as provided above, up to and including the design capacity of a seventy-two (72) inch concrete pipe. The following are recommended maximum design velocities:

Culverts	15 fps
Inlet Laterals	10 fps
Storm Sewers	12.5 fps

   Discharge velocities cannot exceed the permitted velocity of the channel or conduit at the outfall.

3. An open channel may be permitted to accommodate runoff exceeding the design capacity of a seventy-two (72) inch pipe,

as provided below:

a. Channels draining an area with a "CA" factor (coefficient of runoff and drainage area, as used hereinafter described "rational formula") of less than 600 shall be concrete lined to the design depth, plus six (6) inch freeboard except that a closed system as provided above may be used. A twenty (20) foot wide access easement shall be provided along both sides parallel to the channel. The top width of the channel at the design depth must not exceed fifty (50) feet unless specifically approved by the City Administrative Officer or his authorized representative.

b. Channels draining an area with a "CA" factor between 600 and 1,000 shall be improved to a capacity of the 100 year design discharge by excavation, straightening, and realignment, as required, and also the construction of a concrete lined channel having a width of not less than the bottom width with concrete lines to a depth of at least three (3) feet on the banks. Earthen side slopes shall be no steeper than 4:1, horizontal to vertical, and shall have approved ground cover to prevent erosion.

c. Channels draining an area with a "CA" factor over 1,000 shall be designed to carry the capacity of a 100 year flood frequency storm. The specific design and type of construction improvements for this drainage facility shall have specific approval by the City Administrative Officer or authorized representative after review of maintenance, erosion, and site conditions.

d. All areas of an earth Channel Section shall be improved by the Developer with a low maintenance vegetation as approved by the City Administrative Officer or authorized representative prior to planting. The selection of materials shall comply with the current ground cover listing for North Central Texas furnished through the Texas Agricultural Extension Service.

e. The setback for the building line shall be as follows:

   1) A maintenance strip shall be provided with a twenty (20) foot width along each side of the top of the channel unless approved otherwise by the Director of Public Works or authorized representative and shown on the filed plat.

   2) A drainage flume section, which provides for limited flow of stormwater, shall be located within a drainage easement of sufficient width which permits future maintenance accessibility.

f. A drainage feature which is to remain in its natural state of native growth may be accepted by the City to

remain as an unimproved facility so long as the water conveyance capacity of the area is adequate to handle the future drainage requirements.

g. In lieu of the improvements of a channel draining an area with a "CA" factor in excess of 600, the City Council may elect to accept the dedication of all land within the 100 year floodway of the existing drainage channel as a permanent drainage right-of-way.

h. The criteria for drainage improvements as herein-above set forth in Paragraphs (a) through (d) of this section shall be applicable to publicly owned lands solely at the discretion of the City of Mineral Wells.

i. Excavation, fill and grading operations within the City limits and the extraterritorial jurisdiction as defined in Article 970a, Vernon's Texas Civil Statutes, shall be undertaken only after a proper permit has been obtained from the City Building Official. Failure to obtain the proper permit shall result in the requirement for the developer to replace the soils, as required by Chapter 70 of the Appendix of the Uniform Building code as adopted by the City.

j. Easements - Drainage and floodway easements shall be provided for all drainage improvements. Easements shall contain all improvements constructed or required by this section. The minimum acceptable easement width of fifteen feet shall be required for any improvement constructed. Access easement shall be provided to all drainage easements from a public road.

k. Ground cover - any ground cover or vegetation which is planted and is a part of the improvement project will not be accepted by the City until the growth has been established and maintained by the developer for a one (1) year time period.

SECTION 2.2 <u>Responsibility of Owner or Developer for Storm Drainage</u>

1. The owner or developer of property to be developed shall be responsible for all storm drainage flowing through or abutting such property. This responsibility includes the drainage directed to that property by ultimate development as well as the drainage from ultimate development that naturally flows through the property by reason of topography. It is the intent of this Ordinance that provision be made for storm drainage in accordance with Section 2.1 above, at such time as any property affected is proposed for development, use or modification.

2. Where the improvement or construction of a storm drainage facility is required along a property line common to two or more owners, the owner hereafter proposing development of his

property shall be responsible for the required improvements at the time of development, including the dedication of all necessary right-of-way or easements, to accommodate the improvements.

3. Where a property owner's proposed development or use of only a portion of his property, provision for storm drainage in accordance with Section 2.1 above shall only be required in that portion of the property proposed for immediate development, except as construction or improvements of a drainage facility outside that designated portion of the property is deemed essential to the development of that designated portion.

4. When a property owner proposes a development, the owner shall include provisions and plans for control of siltation and downstream erosion. If siltation or downstream erosion occurs, the owner will be responsible to remove siltation or make repairs to eroded areas at his own expense until the owner has established and maintained a ground cover or vegetation in the improvement project for a period of one (1) year.

5. The owner or owners shall dedicate to the City, the required drainage easements. Determination of the minimum easements required shall be made by the City Administrative Officer or authorized representative.

6. In the event that a property owner or developer desires to modify an existing pond or lake or desires to impound storm water by excavation, filling or construction of a dam within a property for retention or detention, thereby creating a lake, pond, lagoon or basin as a part of the planned development of that property, the standard provisions for storm drainage as established in Section 2.1 of this Ordinance shall be applicable and shall also provide the following:

   a. An engineering plan for such construction, accompanied by complete drainage design information prepared by a registered professional engineer, shall have been approved by the City of Mineral Wells.

   b. The owner or developer shall have agreed to retain under private ownership the lake, pond, or lagoon or basin constructed, and to assume full responsibility for the protection of the general public from any health or safety hazards related to the lake, pond, or lagoon constructed.

   c. The owner or developer shall have agreed to assume full responsibility for the maintenance of the lake, pond, or lagoon or basin constructed.

   d. The obligations herein shall run with the land and shall be a continuing obligation of the owner or owners of such

land.

e. All federal, state, and county laws pertaining to impoundment of surface water are complied with including the design construction and safety of the impounding structure. Any existing structure which is included in the project development area shall be improved to comply with the applicable federal, state, county and City safety requirements for structures. The design flows shall be based upon the urbanized drainage flows which can result from a 100 year flood. All improvements shall be made to the dam structure at the expense of the developer, prior to acceptance of the adjacent street, utilities and drainage improvements as provided for under the Subdivision Ordinance.

f. On any existing structure, the owner will furnish a study by a professional engineer to the City for approval prior to any proposed alteration. Compensatory storage shall be provided in some manner such that equal or comparable flood retention capacity is maintained.

7. The maintenance of private drainage facilities shall be provided by the property owner or assigned agent. The City shall be kept advised of the responsible agent.

8. All existing water seepage springs, or flowing water shall be connected into an underground storm sewer system, or they shall be discharged into an appropriate facility which is intended to carry stormwater runoff. Such flow will not be permitted to discharge directly into the street structure.

9. The developer shall provide detailed off-site drainage plans for the proper transition to natural ground or stream elevations. Criteria for on-site development shall apply to off-site improvements as required by the City Administrative Officer or authorized representative.

SECTION 2.3 <u>Engineering Design</u>

1. Each storm drainage facility, including street capacities, shall be designed to convey the runoff which results from a certain prescribed design storm.

   Drainage design requirements for open and closed systems shall provide protection for property during a storm having a 100 year recurrence interval with this projected flow carried in the streets and closed drainage systems in accordance with the following:

Drainage Facility	Design Recurrence Interval
Closed storm sewer systems	10 yr w/emergency 100 yr overflow

The drainage aggregate shall be compacted in four inch layers with a vibratory plate power hand compactor. Each lift shall be compacted with a minimum of eight passes of the compactor.

The drainage pipe shall be installed in conjunction with the drainage aggregate in such a manner that will prevent damage to the pipe and will not interfere with compaction of the aggregate. Prior to installation, the vertical centerline shall be marked on the top of each section of perforated pipe, with a waterproof felt-tipped marker or other suitable device, to facilitate verification that the perforations are properly oriented. Fittings of the proper type shall be provided at all bends and junctions in the drainage pipe.

All roadways which require an aggregate drainage course and do not contain a storm drain collection system shall provide subgrade drainage as follows:

> The geotextile and aggregate drainage course shall "daylight" at each existing drainage-way along the proposed roadway.

Pavement Thickness Design - All concrete street pavement thickness shall be designed for simple reinforced concrete pavements. The procedures outlined in the PCA publication, "Thickness Design for Concrete Highway and Street Pavements", (Ref.1) shall be followed. The Design Factors noted above shall be used when determining the concrete pavement thickness.

Joint Design - Joints are required in rigid pavements to allow for expansion of the slab, reduce the stresses and cracking caused by warping, reduce the amount of shrinkage cracking and provide a means of interim termination of the concrete placing operation during construction. Accordingly, expansion joints, longitudinal contraction (warping) joints, transverse contraction joints and construction joints shall be required. General joint details are shown on the attached plates.

1. **Expansion Joints** - Expansion joints shall be provided at intersections, where the pavement abuts a structure and otherwise at intervals not to exceed 600 feet.

2. **Longitudinal Contraction (Warping) Joints** - Longitudinal contraction shall be provided at approximately each twelve (12) feet of pavement width or between lanes. These joints generally shall be of the saw-cut (dummy) joint type similar to those shown on the attachments except where wide pavements require the use of longitudinal construction joints.

3. **Transverse Contraction Joints** - Transverse contraction joints shall normally be placed at intervals approximately equal to the pavement width. <u>No bonded reinforcement</u> shall extend across transverse contraction joints. Saw-cut dowelled transverse contraction joints as shown on the attached plates shall be used.

4. **Longitudinal Construction Joints** - Longitudinal construction joints shall be required where the pavement width exceeds twenty-four (24) feet. These joints shall be tied with deformed bars as shown on the attachments.

5. **Transverse Construction Joints** - Transverse construction joints shall be minimized. The pavement shall be placed in one pour between expansion joints, where practical, with transverse construction joints being used only for emergency termination of the pavement placing operation. Transverse construction joints where unavoidable shall be used in place of a transverse contraction joint. Typical construction joint details are shown on the attached plates.

6. **Smooth Steel Dowels** - Smooth steel dowels shall be used for load transfer devices at expansion and contraction joints. The dowels shall be designed as outlined in "Principles of Pavement Design" by E.J. Yoder and M.W. Wiczak, (Ref. 3). The length of dowel embedment in the concrete shall be nine (9) inches.

Reinforcing Design - Distribution reinforcement in the transverse and longitudinal direction shall be designed as outlined in "Principles of Pavement Design" by E.J. Yoder and M.W. Wiczak, (Ref. 3). Typical reinforcement details are shown on the attached plates.

SECTION 1.3 Flexible Pavement

Flexible Pavement Thickness Design Procedures - The pavement thickness shall be designed for an improved subgrade CBR value of not less than seven (7) and the probable truck traffic anticipated during the design period.

Subgrade Support - The composite CBR value shall be used to determine the load carrying capacity of the subgrade. The developer's engineer shall furnish the subgrade soil information described above, under Subgrade Support for Flexible Pavement, along with the pavement thickness calculations.

The developer may select to stabilize the raw subgrade with a minimum of six (6) percent lime or cement to modify the subgrade soil. The top eight (8) inches of the subgrade soil shall be stabilized. This eight (8) inch lift of stabilized soil may be assigned a maximum CBR value of twenty (20).

At the developers option, CBR tests may be performed on the subgrade soils with the six (6) percent lime or cement as determined by ASTM D-3668. If only one CBR test is performed, the CBR value shall be reduced by 20%. If two (2) CBR tests are performed, the average of the two CBR tests shall be reduced by 10%. If three (3) or more CBR tests are performed, the average of the CBR values shall be used.

The stabilized subgrade shall be recompacted to no less than 100%

of maximum dry density with a moisture content within two (2) percentage points dry to three (3) percentage points wet of optimum moisture content, as determined by ASTMN D-698, Standard Proctor.

When the subgrade soil is stabilized, a composite CBR value shall be determined as follows:

> The raw subgrade CBR is multiplied by two (2) then added to the stabilized subgrade CBR of twenty (20), (or CBR value obtained from actual CBR tests) and divided by two (2) to obtain the composite CBR value. The composite CBR is used to determine the Total Design Thickness from Figure 2 in Appendix B, as described later in Total Pavement Thickness Design.

Design Period - The design period shall be twenty (20) years.

The intersections of two (2) primary thoroughfares, two (2) secondary thoroughfares, a primary thoroughfare and a primary collector and a primary thoroughfare and a secondary thoroughfare shall be designed for 40 years.

Traffic - Traffic counts by vehicle type shall be used when available. The vehicle types shall be grouped as follows:

Group 1 - Passenger cars, panel and pickup trucks.
Group 2 - Two-axle trucks loaded or larger vehicles apparently carrying light cargoes.
Group 3 - Truck or combination vehicles having three, four, or more loaded axles.

Traffic count information on each vehicle type shall be converted to equivalent axle loads of 18 kips, (designated EAL), by using Figure 1, in Appendix B. Figure 1 was taken from the National Stone Association's FLEXIBLE PAVEMENT DESIGN GUIDE FOR ROADS AND STREETS, (Ref. 4).

When traffic count information is not available, Table 1.2 which defines six Design Index categories for traffic shall be used. The Design Index (DI) Numbers shown in Table 1.2 are based on descriptions in U.S. Army Technical Manuals and were taken from the National Stone Association's DESIGN GUIDE FOR PARKING AREAS, (Ref. 5).

Table 1.2

Design Index Categories for Traffic

Design Index	General Character	Daily EAL
DI-1	**Local Streets** - Light traffic (few vehicles heavier than passenger cars, no regular use by Group 2 or 3 vehicles).	5 or less
DI-2 and DI-3	**Collector Streets** - Medium traffic (maximum 3,000 VPD, including not over 10% Group 2 and 3, and 1% Group 3 vehicles).	21 - 75
DI-4	**Secondary Thoroughfare** - Medium-heavy traffic (maximum 6000 VPD, including not over 15% Group 2 and 3, and 1% Group 3 vehicles).	76 - 250
DI-5	**Primary Thoroughfare** - Heavy Traffic (maximum 6,000 VPD, may include 25% Group 2 and 3, and 10% Group 3 vehicles).	251 - 900
Notes:	EAL = equivalent 18 kip axle loads in design lane, average daily use over life expectancy of 20 years with normal maintenance. VPD = vehicles per day, all types, using design lane.	

Total Pavement Thickness Design - The National Stone Association (NSA) design method, outlined in DESIGN GUIDE FOR PARKING AREAS, (Ref. 5), shall be used to determine the total flexible pavement thickness. This method uses a thickness design chart, Figure 2 in Appendix B, developed by the U.S. Army Corps of Engineers. The total design thickness of the pavement shall be selected from Figure 2 based upon the improved subgrade CBR and the traffic design index, and shall be a minimum of eight (8) inches. All flexible pavement structures shall include geotextile for soil stabilization, separation and filtration.

When the subgrade CBR is greater than ten (10), the Total Design Thickness selected from Figure 2 will be used to determine the pavement section.

When the subgrade is relatively weak (CBR between two (2) and ten (10), a geotextile for soil stabilization shall be used. The NSA method based upon the subgrade CBR and Traffic Design Index does not take into consideration the use of a geotextile for soil stabilization. An apparent improved CBR (Geomod) value can be determined from Figure 3 in Appendix B. Figure 3 was taken from DESIGN OF FLEXIBLE PAVEMENTS WITH GEOTEXTILES, (Ref. 2). The

Geomod CBR value can be used to determine the total design thickness of the pavement with a geotextile, when the raw subgrade CBR is between two (2) and ten (10).

A Total Design Thickness with a geotextile for soil stabilization shall be selected from Figure 2 based upon the Geomod CBR and the Traffic Design Index.

Pavement Drainage - Proper internal drainage of the pavement structure is of utmost importance. The subgrade shall be graded for positive drainage to the roadway subdrainage system. The geotextile and aggregate base course shall "daylight" to drainage channels or subsurface drain systems which exit to stormdrain systems or a drainageway. The aggregate base course is the total pavement thickness less the asphalt concrete surface course thickness. When the aggregate base thickness is eight (8) inches or more, it shall consist of a lower drainage course of uniform size free draining stone and an upper course of well-graded aggregate base material.

Subdrainage System for Roadways - All flexible pavement roadways shall provide for subgrade drainage as outlined in Subdrainage System for Roadways in Section 1.2.

Drainage Course - The drainage course serves two purposes; providing free flow of water out of the pavement structures and a working surface for protection and pre-tensioning of the geotextile. One of the following standard aggregate gradations, ASTM D-448 size No. 57 or No. 67 shall be used as the drainage course. The minimum drainage course thickness shall be five (5) inches when the total aggregate base thickness is eight (8) inches and a minimum of six (6) inches when the total aggregate base thickness is nine (9) inches or greater. A geotextile is required for all flexible pavement structures.

The aggregate drainage course shall be required when the subgrade has a Unified Soil Classification of GW, CP, SW or SP, provided the subgrade has a means of draining to daylight or is significantly thick.

Well-Graded Aggregate Base (Flexible Base) - The well-graded aggregate base shall consist of a well graded, low P.I. crushed stone material. This aggregate shall have a maximum of twelve (12) percent passing the number 100 sieve by the wet sieve method to provide for better drainage. The "flexible base" gradation from the Texas State Department of Highways and Public Transportation, (Ref. 6) specification for Type A-Grade 1 material shall be used for the well-graded aggregate base. The well-graded base course provides a smoother, more cohesive surface which accommodates shaping to closer surface tolerances and provides a good surface for placement of the asphalt concrete surface course.

Placement of the well-graded aggregate base course shall follow immediately behind the aggregate drainage course. This course shall be rolled with a minimum of eight (8) passes with the 10 ton

steel-wheeled vibratory roller and shall be compacted to a minimum density of 100% of maximum dry density, near optimum moisture content, as determined by ASTM D-1557, modified Proctor. Close observation and compaction control shall be performed.

Where the total design thickness of the aggregate base course is less than eight (8) inches, a single layer of well-graded aggregate shall be used. The well-graded aggregate will serve as the drainage course except when the subgrade has a unified Soil Classification of GW, GP, SW, or SP. Where the well-graded aggregate course serves as the drainage course, the gradation requirements shall be changed to allow a maximum of three (3) percent passing the number 100 sieve by the wet sieve method.

Aggregates retained on the number 4 sieve shall consist of durable, angular crushed stone particles and shall have a percentage of wear of not more than fifty (50) when tested in accordance with ASTM Method C-131 and a maximum of fifteen (15) percent loss when subjected to five (5) cycles of the sodium sulfate soundness test in accordance with ASTM Method C-88.

Where only one aggregate base course is used, the installation procedure shall proceed similar to that described above. If the composition of the aggregate base material is not suited for Proctor methods of density control, another recognized, acceptable method (such as percent of maximum theoretical density) shall be used. Any deformations in the surface of either aggregate base course which occur during placement shall be filled with additional aggregate during the compaction process rather than reblading aggregate into the depressions from the adjacent surfaces.

Geotextile - Soil Stabilization - The geotextile shall be a nonwoven fabric consisting only of continuous chain polymer filaments or yarns of polyester, formed into a stable network by needle punching. The fabric shall be inert to commonly encountered chemicals, hydrocarbons, mildew and rot resistant, resistant to ultraviolet light exposure, insect and rodent resistant, and conform to the properties in Table 1.3. The average roll minimum value (weakest principle direction) for strength properties of any individual roll tested from the manufacturing lot or lots of a particular shipment shall be in excess of the average roll minimum (weakest principle direction) stipulated herein.

Geotextile shall be TREVIRA S1125, Quline Q100 or an approved equivalent.

The geotextile shall be installed on the prepared subgrade. Overlaps, when necessary, shall be thirty-six (36) inches minimum. The aggregate shall be back dumped onto the fabric and spread in a uniform lift always maintaining the design aggregate thickness. Construction vehicles will not be allowed to traffic directly on the fabric.

Overstressing the soil shall be avoided by using equipment in spreading and dumping that exerts only moderate pressures on the

soil. Severe rutting at the time of placement is an indication of overstressing the soil. Such soil overstressing must be avoided. Increasing the aggregate depths and reducing loads are two methods of reducing the pressures on the soil.

Any ruts which develop during spreading or compacting shall be filled with additional aggregate rather than blading from surrounding areas.

Table 1.3

Geotextile Test Requirements

Physical Properties (Weakest Principle Direction)	Average Roll Minimum Value
Grab Tensile Strength ASTM D1682 (Lbs.)	200
Elongation At Failure ASTM D1682 (%)	60
Mullen Burst Strength ASTM D3786 (PSI)	320
Water Flow Rate (gal/min/sq.ft.) (5 in. constant head) (ASTM D4491)	100
Apparent Opening Size (A.O.S.) (U.S. Standard Sieve No.) CW-02215 U.S. Std. Sieve Number larger than	70
Trapezoid Tear Strength ASTM D1117	60
Puncture Strength ASTM D751 (modified) Lbs.)	80

Asphalt Concrete Surface Course - Asphalt concrete surface course thicknesses shown in Table 1.4 were taken from National Stone Association's FLEXIBLE PAVEMENT DESIGN GUIDE FOR ROADS AND STREETS, (Ref. 4). Table 1.4 presents the minimum hot mix asphaltic concrete surface course thickness based upon the Traffic Design Index.

The hot mix asphaltic concrete surface course shall comply in all respects to ITEM 340, "Hot Mix Asphaltic Concrete" of the STANDARD SPECIFICATIONS FOR CONSTRUCTION OF HIGHWAYS, STREET, AND BRIDGES, as adopted by the STATE DEPARTMENT OF HIGHWAYS AND PUBLIC TRANSPORTATION, (Ref. 6), FOR TYPE "D".

All course graded binder course shall conform to Type "A", (coarse Graded Base Course) as specified in the STANDARD SPECIFICATIONS FOR CONSTRUCTION OF HIGHWAYS, STREETS AND BRIDGES, (Ref. 6).

Table 1.4

Hot Mix Asphaltic Concrete Thickness

Traffic Design Index	Hot Mix Asphaltic Concrete Thickness (inches)	
	Type "D" (Fine Graded)	Type "A" (Course Graded)
DI-1	1.5	----
DI-2	2.0	----
DI-3	1.0	1.5
DI-4	1.0	2.0
DI-5	1.0	2.5

An RC-2 prime coat shall be applied at a rate of 0.25 gallons per square yard to the aggregate base course prior to the placement of the hot mix asphaltic concrete.

A type RC-2 tack coat shall be applied to each layer of asphaltic concrete before the next layer is applied. The tack coat shall also be applied to any exposed concrete edges that will abut any hot mix asphaltic concrete. The tack coat shall be applied to each layer at a rate not to exceed 0.05 gallons per square yard of surface.

The hot mix asphalt concrete courses, including prime and tack coats, shall follow closely behind the completion of the aggregate base courses. The placement methods and density of the asphalt concrete shall be closely monitored and controlled by marshall density, or percent of maximum theorectical density. Compaction of the hot mix asphaltic concrete shall be as specified in ITEM 340 STANDARD SPECIFICATIONS FOR CONSTRUCTION OF HIGHWAYS, STREETS AND BRIDGES, (Ref. 6).

SECTION 1.4 Quality Control

Table 1.5 lists the types of tests and frequency that shall be performed by the testing laboratory approved by City.

Table 1.5

Quality Control Testing Requirements

Area to be Tested	Frequency
Concrete Pavement	
Moisture and Density Tests Scarified and Recompacted Subgrade	Min. 3 per 500 feet
Compacted Earth Fill Subgrade	Min. 3 per 500 feet per 8 inch lift
Thickness Verification of Total Pavement Structure*	Min. 3 per 500 feet
Concrete Compressive Strength	3 per 50 C.Y. Min. 3 per day
Asphalt Concrete Pavement	
Moisture and Density Tests Scarified and Recompacted Subgrade	3 per 500 feet
Compacted Earth Fill Subgrade	Min. 3 per 500 feet per 8 inch lift
Moisture and Density Tests of Well-graded Aggregate Base (Flexible Base)	Min. 3 per 500 feet
Marshall Density of Asphaltic Concrete	Min. 3 per 500 feet
Thickness Verification of Total Pavement Structure*	Min. 3 per 500 feet

*Field observations during construction, conducted by City personnel, may be substituted in lieu of thickness verification tests.

SECTION 1.5 Pavement Widths and Right-of-Way Widths

Pavement Widths and Right-of-Way Widths - Pavement widths shall be measured from the back of one curb to the back of the other curb. The minimum widths of pavement and right-of-way shall conform to the adopted Comprehensive Plan and Subdivision Ordinance; and pavement sections shall conform to the design details of the City. These widths are summarized in Table 1.6.

The alignment and design of streets should be such that collector streets have a safe running speed of 50 miles per hour, and residential streets have a safe running speed of 40 miles per hour.

Table 1.6

Minimum Widths of Paving and Right-of-Way

Street Classification	Minimum Paving Width*	Minimum Right-of-Way Width
Primary Thoroughfare	25' with 20' median	120'
Secondary Thoroughfare	25' with 11' median	90'
Collector	45'	70'
Local Street	31'	50'

*Paving on primary and secondary thoroughfares consist of two (2) paving sections with a median.

SECTION 1.6 Street Grades

Thoroughfares and Collector streets may have a maximum grade of seven and one-half (7½) percent. Residential streets may have a maximum grade of ten percent, unless otherwise approved by the City where the natural topography is such as to require steeper grades. All streets must have a minimum grade of at least five-tenths (5/10) of one (1) percent. Centerline grade changes with an algebraic difference of more than one (1) percent shall be connected with vertical curves in compliance with the minimum length requirements set forth in Table 1.7.

Table 1.7

Minimum Length of Vertical Curves - in Feet

Crest Vertical Curves

Algebraic Difference In Grade - Percent	Design Speed		
	30 MPH	35 MPH	40 MPH
1.0	100	100	100
2.0	100	100	120
3.0	100	120	180
4.0	120	160	240
5.0	150	200	300
6.0	180	240	360
7.0	210	280	420
8.0	240	320	480
9.0	270	360	540
10.0	300	400	600

Sag Vertical Curves

Algebraic Difference In Grade - Percent	Design Speed		
	30 MPH	35 MPH	40 MPH
1.0	100	100	100
2.0	100	100	120
3.0	120	150	180
4.0	160	200	240
5.0	200	250	300
6.0	240	300	360
7.0	280	350	420
8.0	320	400	480
9.0	360	450	540
10.0	400	500	600

SECTION 1.7 Street Lights

In general, lights should be located on metal or fiberglass poles at street intersections and at intervals no greater than 500 feet apart. Street lights should be the equivalent of 9,500 lumens high pressure sodium fixtures on minor residential streets. All collector streets and thoroughfares shall have high pressure sodium fixtures with an equivalent of 27,500 lumens. The City reserves the right to inspect the street lighting construction. In any event, a street light will be required at each cul-de-sac.

ARTICLE II

CITY OF MINERAL WELLS

DESIGN STANDARDS
FOR
STORM DRAINAGE

ARTICLE II

STORM DRAINAGE

SECTION 2.1 Standard Provisions

Standard Provisions

All construction for storm drainage in the development or improvement of property within the City of Mineral Wells shall conform to the following standards and requirements:

1. Storm sewer inlets shall be provided along paved streets at such intervals as are necessary to limit the depth of flow as follows:

   Residential Streets - Based on parkway slopes of 1/4 inch per foot behind the curb, the 100 year Design Frequency flows shall not exceed a depth of 0 inches over the top of the curb.

   Collector Streets - Based on parkway slopes of 1/4 inch per foot behind the curb, the 100 year Design Frequency flow shall not exceed the elevation of the lowest top of curb.

   Arterials - Based on a transverse slope of 1/4 inch per foot on the pavement, the 100 year Design Frequency flow shall not exceed the elevation of the lowest top of curb.

   Alleys - The 100 year Design Frequency flows shall not exceed the capacity of the alley sections.

   Positive Overflow - The approved drainage system shall provide for positive overflow at all low points. The term "positive overflow" means that when the inlets do not function properly or when the design capacity of the conduit is exceeded, the excess flow can be conveyed over land along a concrete paved course. Normally, this would mean along a street or alley, but can require the dedications of special drainage easements on private property.

2. A closed storm sewer system shall be required to accommodate a runoff exceeding the street capacity, as provided above, up to and including the design capacity of a seventy-two (72) inch concrete pipe. The following are recommended maximum design velocities:

Culverts	15 fps
Inlet Laterals	10 fps
Storm Sewers	12.5 fps

   Discharge velocities cannot exceed the permitted velocity of the channel or conduit at the outfall.

3. An open channel may be permitted to accommodate runoff exceeding the design capacity of a seventy-two (72) inch pipe,

as provided below:

a. Channels draining an area with a "CA" factor (coefficient of runoff and drainage area, as used hereinafter described "rational formula") of less than 600 shall be concrete lined to the design depth, plus six (6) inch freeboard except that a closed system as provided above may be used. A twenty (20) foot wide access easement shall be provided along both sides parallel to the channel. The top width of the channel at the design depth must not exceed fifty (50) feet unless specifically approved by the City Administrative Officer or his authorized representative.

b. Channels draining an area with a "CA" factor between 600 and 1,000 shall be improved to a capacity of the 100 year design discharge by excavation, straightening, and realignment, as required, and also the construction of a concrete lined channel having a width of not less than the bottom width with concrete lines to a depth of at least three (3) feet on the banks. Earthen side slopes shall be no steeper than 4:1, horizontal to vertical, and shall have approved ground cover to prevent erosion.

c. Channels draining an area with a "CA" factor over 1,000 shall be designed to carry the capacity of a 100 year flood frequency storm. The specific design and type of construction improvements for this drainage facility shall have specific approval by the City Administrative Officer or authorized representative after review of maintenance, erosion, and site conditions.

d. All areas of an earth Channel Section shall be improved by the Developer with a low maintenance vegetation as approved by the City Administrative Officer or authorized representative prior to planting. The selection of materials shall comply with the current ground cover listing for North Central Texas furnished through the Texas Agricultural Extension Service.

e. The setback for the building line shall be as follows:

   1) A maintenance strip shall be provided with a twenty (20) foot width along each side of the top of the channel unless approved otherwise by the Director of Public Works or authorized representative and shown on the filed plat.

   2) A drainage flume section, which provides for limited flow of stormwater, shall be located within a drainage easement of sufficient width which permits future maintenance accessibility.

f. A drainage feature which is to remain in its natural state of native growth may be accepted by the City to

remain as an unimproved facility so long as the water conveyance capacity of the area is adequate to handle the future drainage requirements.

g. In lieu of the improvements of a channel draining an area with a "CA" factor in excess of 600, the City Council may elect to accept the dedication of all land within the 100 year floodway of the existing drainage channel as a permanent drainage right-of-way.

h. The criteria for drainage improvements as herein-above set forth in Paragraphs (a) through (d) of this section shall be applicable to publicly owned lands solely at the discretion of the City of Mineral Wells.

i. Excavation, fill and grading operations within the City limits and the extraterritorial jurisdiction as defined in Article 970a, Vernon's Texas Civil Statutes, shall be undertaken only after a proper permit has been obtained from the City Building Official. Failure to obtain the proper permit shall result in the requirement for the developer to replace the soils, as required by Chapter 70 of the Appendix of the Uniform Building code as adopted by the City.

j. Easements - Drainage and floodway easements shall be provided for all drainage improvements. Easements shall contain all improvements constructed or required by this section. The minimum acceptable easement width of fifteen feet shall be required for any improvement constructed. Access easement shall be provided to all drainage easements from a public road.

k. Ground cover - any ground cover or vegetation which is planted and is a part of the improvement project will not be accepted by the City until the growth has been established and maintained by the developer for a one (1) year time period.

SECTION 2.2 <u>Responsibility of Owner or Developer for Storm Drainage</u>

1. The owner or developer of property to be developed shall be responsible for all storm drainage flowing through or abutting such property. This responsibility includes the drainage directed to that property by ultimate development as well as the drainage from ultimate development that naturally flows through the property by reason of topography. It is the intent of this Ordinance that provision be made for storm drainage in accordance with Section 2.1 above, at such time as any property affected is proposed for development, use or modification.

2. Where the improvement or construction of a storm drainage facility is required along a property line common to two or more owners, the owner hereafter proposing development of his

property shall be responsible for the required improvements at the time of development, including the dedication of all necessary right-of-way or easements, to accommodate the improvements.

3. Where a property owner's proposed development or use of only a portion of his property, provision for storm drainage in accordance with Section 2.1 above shall only be required in that portion of the property proposed for immediate development, except as construction or improvements of a drainage facility outside that designated portion of the property is deemed essential to the development of that designated portion.

4. When a property owner proposes a development, the owner shall include provisions and plans for control of siltation and downstream erosion. If siltation or downstream erosion occurs, the owner will be responsible to remove siltation or make repairs to eroded areas at his own expense until the owner has established and maintained a ground cover or vegetation in the improvement project for a period of one (1) year.

5. The owner or owners shall dedicate to the City, the required drainage easements. Determination of the minimum easements required shall be made by the City Administrative Officer or authorized representative.

6. In the event that a property owner or developer desires to modify an existing pond or lake or desires to impound storm water by excavation, filling or construction of a dam within a property for retention or detention, thereby creating a lake, pond, lagoon or basin as a part of the planned development of that property, the standard provisions for storm drainage as established in Section 2.1 of this Ordinance shall be applicable and shall also provide the following:

   a. An engineering plan for such construction, accompanied by complete drainage design information prepared by a registered professional engineer, shall have been approved by the City of Mineral Wells.

   b. The owner or developer shall have agreed to retain under private ownership the lake, pond, or lagoon or basin constructed, and to assume full responsibility for the protection of the general public from any health or safety hazards related to the lake, pond, or lagoon constructed.

   c. The owner or developer shall have agreed to assume full responsibility for the maintenance of the lake, pond, or lagoon or basin constructed.

   d. The obligations herein shall run with the land and shall be a continuing obligation of the owner or owners of such

land.

e. All federal, state, and county laws pertaining to impoundment of surface water are complied with including the design construction and safety of the impounding structure. Any existing structure which is included in the project development area shall be improved to comply with the applicable federal, state, county and City safety requirements for structures. The design flows shall be based upon the urbanized drainage flows which can result from a 100 year flood. All improvements shall be made to the dam structure at the expense of the developer, prior to acceptance of the adjacent street, utilities and drainage improvements as provided for under the Subdivision Ordinance.

f. On any existing structure, the owner will furnish a study by a professional engineer to the City for approval prior to any proposed alteration. Compensatory storage shall be provided in some manner such that equal or comparable flood retention capacity is maintained.

7. The maintenance of private drainage facilities shall be provided by the property owner or assigned agent. The City shall be kept advised of the responsible agent.

8. All existing water seepage springs, or flowing water shall be connected into an underground storm sewer system, or they shall be discharged into an appropriate facility which is intended to carry stormwater runoff. Such flow will not be permitted to discharge directly into the street structure.

9. The developer shall provide detailed off-site drainage plans for the proper transition to natural ground or stream elevations. Criteria for on-site development shall apply to off-site improvements as required by the City Administrative Officer or authorized representative.

SECTION 2.3 Engineering Design

1. Each storm drainage facility, including street capacities, shall be designed to convey the runoff which results from a certain prescribed design storm.

   Drainage design requirements for open and closed systems shall provide protection for property during a storm having a 100 year recurrence interval with this projected flow carried in the streets and closed drainage systems in accordance with the following:

Drainage Facility	Design Recurrence Interval
Closed storm sewer systems	10 yr w/emergency 100 yr overflow

Drainage Facility	Design Recurrence Interval
Closed storm sewer systems at street low point or sag	25 yr. w/emergency 100 yr overflow
Culverts and bridges	100 yr. (unless otherwise directed)
Concrete lined channels	50 yr. w/emergency 100 yr. overflow
Earthen channels	100 yr.

2. Computation of stormwater runoff for drainage areas less than 150 acres shall be by the "Rational Method", which is based on the principle that the maximum rate of runoff from a given drainage area for an assumed rainfall intensity occurs when all parts of the area are contributing to the flow at the point of discharge. The formula for calculation of runoff by the "Rational Method" is:

   $Q = CIA$, Where

   Q = The maximum rate of discharge, expressed in cubic feet per second.

   I = Rainfall intensity in inches per hour from the applicable curves of Plate 1. Time of concentration or duration of rainfall for use in Figure 1 shall be calculated by velocity data shown in Table 2.1.

   C = A runoff coefficient which varies with the topography, soil, soil cover, land use and moisture content of the soil at the time the runoff producing rainfall occurs. This runoff coefficient shall be based on the ultimate use of the land as recommended by the Comprehensive Plan for the City of Mineral Wells or proposed by developer/owner and shall be selected from Table 2.2 herein. If an area's current use if of a higher use than shown on Comprehensive Plan, the higher "C" factor shall be used.

   A = The drainage area, expressed in acres, contributing to the runoff at the point in question. Calculation of the drainage area shall be made from a contour map of one (1) foot intervals of which a copy shall be submitted with the engineering plans for approval.

   For drainage areas in excess of 150 acres, the use of a Unit Hydrograph Flow Determination shall be made. The use of a unit Hydrograph calculation will be based upon standard and accepted Engineering Principles normally used in the profession subject to the approval of the City Administrative Officer or authorized representative. The Soil Conservation Service Technical Release Number 55

is an acceptable method.

Computation of runoff shall be based on a fully developed drainage area, or watershed, in accordance with the land use projected in the current comprehensive land use plan for the City of Mineral Wells. The developer or builder shall develop their site development plans so that the rate of runoff created by the development of their property does not exceed the rate of runoff resulting from an R-4 residential zoning.

Table 2.1

Average Velocity for Use in Determining Time of Concentration

Description of Water Course	0% to 3% V. in f.p.s.	4% to 7% V. in f.p.s.	8% to 11% V. in f.p.s.	Over 12% V. in f.p.s
Surface drainage	5	9	13	15
Channels	Determine V. by Mannings Formula			
Storm Sewer	Determine V. by Mannings Formula			

Average velocities of Table 2.1 are to be used for calculating the time of concentration or "Rainfall Duration" as called on Figure 1 unless the designer shows calculation of velocities by streets and/or storm sewers.

3. The Rational Method will be used for drainage areas less than or equal to 150 acres. As the Rational Method is used and detention is required, the volume of water supplied by the design storm may be calculated by converting the runoff rate, during a specific duration, to volume. The inflow volume should be determined for a period of at least twice the time of concentration for the site.

Table 2.2

Values of "C" for Use in "Rational Method" Formula Q=CIA

Slope	Land Use From Master Plan	Value of "C" (Runoff Coefficient-Rational Method)
Flat 0% to 1%	Park areas, no developable land	0.20
	Park and school land tract	0.30
	Single family residential	0.45
	Duplex	0.50
	Multiple family	0.55
	Local business	0.65
	Central business	0.80
	Commercial	0.80
	Industrial	0.75
Moderate 1% to 3½%	Park areas, no developable land	0.30
	Park and school land tract	0.40
	Single family residential	0.50
	Duplex	0.55
	Multiple family	0.60
	Local business	0.70
	Central business	0.85
	Commercial	0.85
	Industrial	0.80
Steep 3.5% and over	Park areas, no developable land	0.35
	Park and school land tract	0.45
	Single family residential	0.65
	Duplex	0.70
	Multiple family	0.75
	Local business	0.80
	Central business	0.85
	Commercial	0.85
	Industrial	0.85

Retention and detention are two generalized types of storm runoff storage used to control the rate of runoff. All detention ponds should be designed to empty within a 24 hour period.

Using the average velocities from this table, the designer shall calculate the time of concentration by the following formula unless more data is shown on the plans for calculating time of concentration.

"Inlet Time" = the time for inlet at the upper end of the line plus the time of flow through the storm pipe from the upper end of the storm pipe to the point in question. Each component of the time of concentration can be estimated by the equation:

$$tc = \frac{D_L}{(V \times 60)}$$

tc = Time of concentration (in minutes)

D_L = Distance in feet from point of concentration to upper end of drainage area under consideration.

V = Velocity from Table II or calculated (in seconds per feet)

A five (5) minute minimum time of concentration shall be used for property zoned multiple family, local business, central business, commercial, or industrial; and a ten (10) minute minimum for property zoned for park areas, schools, single family, and duplex.

The existing soils are such that erosive conditions are created at certain velocities. The following velocities are considered to be maximum acceptable design conditions.

Earth (with no concrete protection)	0 to 5 feet per second
Shale	5 to 6 feet per second
Rock	6 to 10 feet per second

4. The minimum curb inlet size shall be eight (8) feet in length with a minimum capacity of 8 cfs.

5. The construction of all improvements shall be in accordance with the standards set forth in the City's rainfall intensity chart in years (Figure 1), the inlet Capacity for low point inlets (Figure 2), the drainage capacity road sections (Figure 3), and the Typical Sections of Drainage Channels (Figure 4), are hereby adopted as a part of this Ordinance.

6. Complete engineering plans for storm drainage facilities shall be prepared by a professional engineer, registered in the State of Texas, and experienced in civil engineering work. The total cost for such engineering plans and specifications shall be borne by the owner or the developer and shall be furnished to the City Administrative Officer or authorized representative for his review and approval.

7. In any development, alteration or improvement of property, the owner may be required to provide at his expense a preliminary drainage study for the total area to be ultimately developed. This study shall be submitted to the City Administrative Officer or authorized representative as a part of the submitted data for consideration of Preliminary Plat or Site Plan approval.

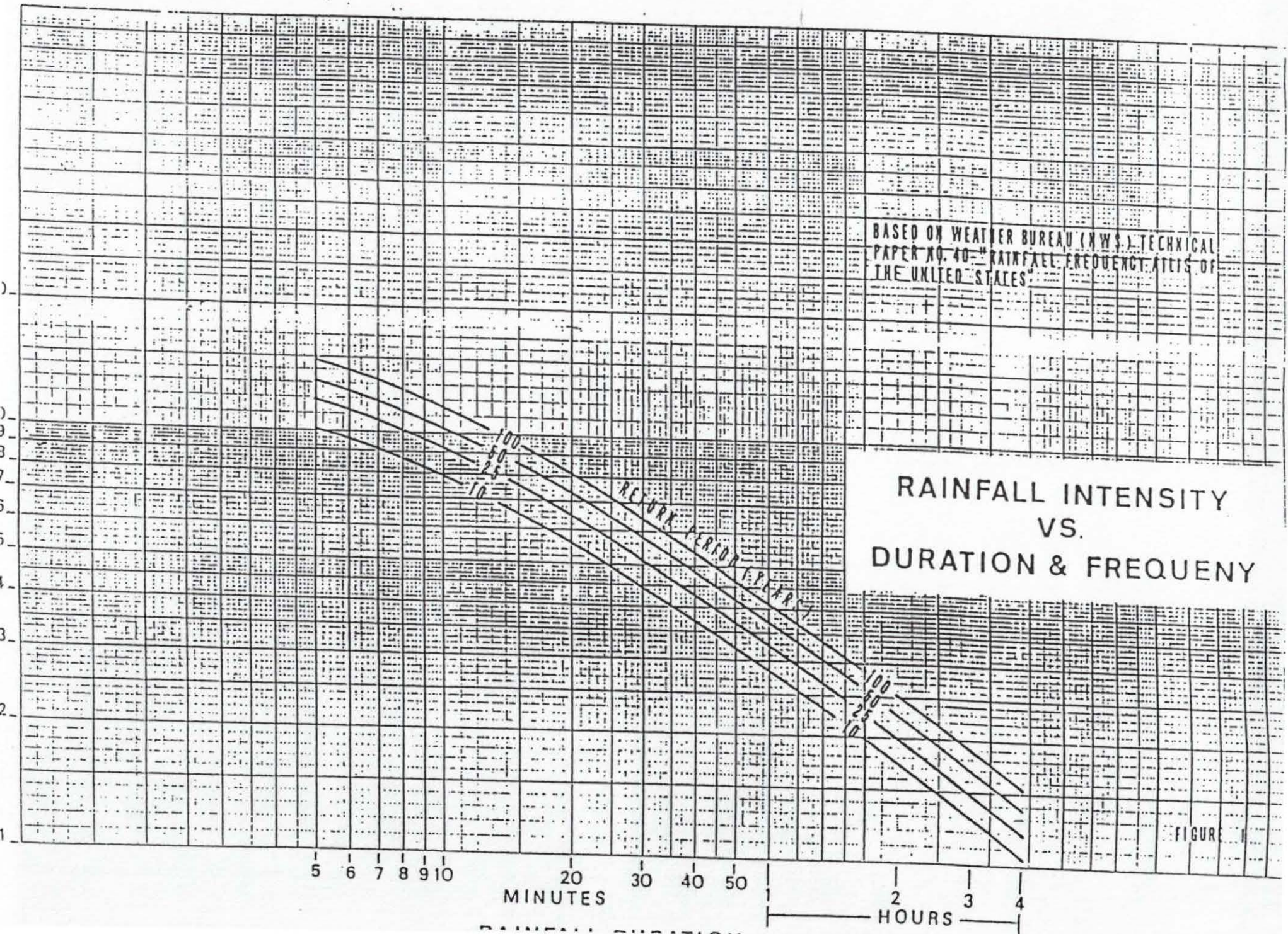
BASED ON WEATHER BUREAU (N.W.S.) TECHNICAL PAPER NO. 40 - "RAINFALL FREQUENCY ATLAS OF THE UNITED STATES"
RAINFALL INTENSITY
VS.
DURATION & FREQUENY
RETURN PERIOD (YEARS)
100
50
25
10
100
50
25
10
FIGURE 1
5 6 7 8 9 10 20 30 40 50
MINUTES
1 2 3 4
HOURS
RAINFALL DURATION

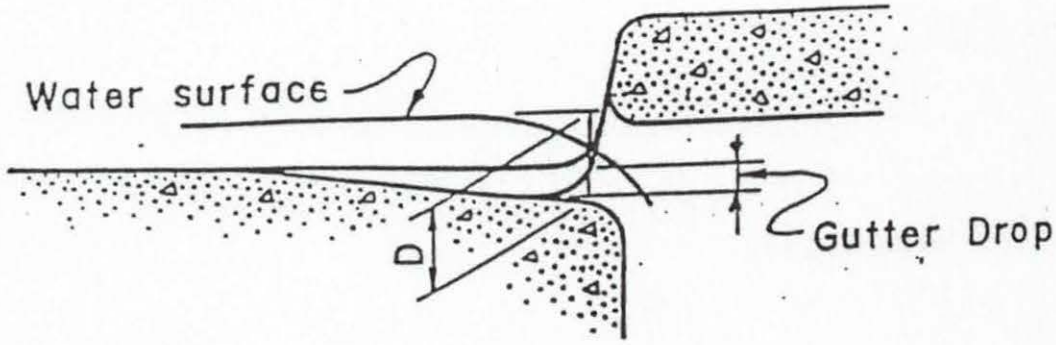

SECTION

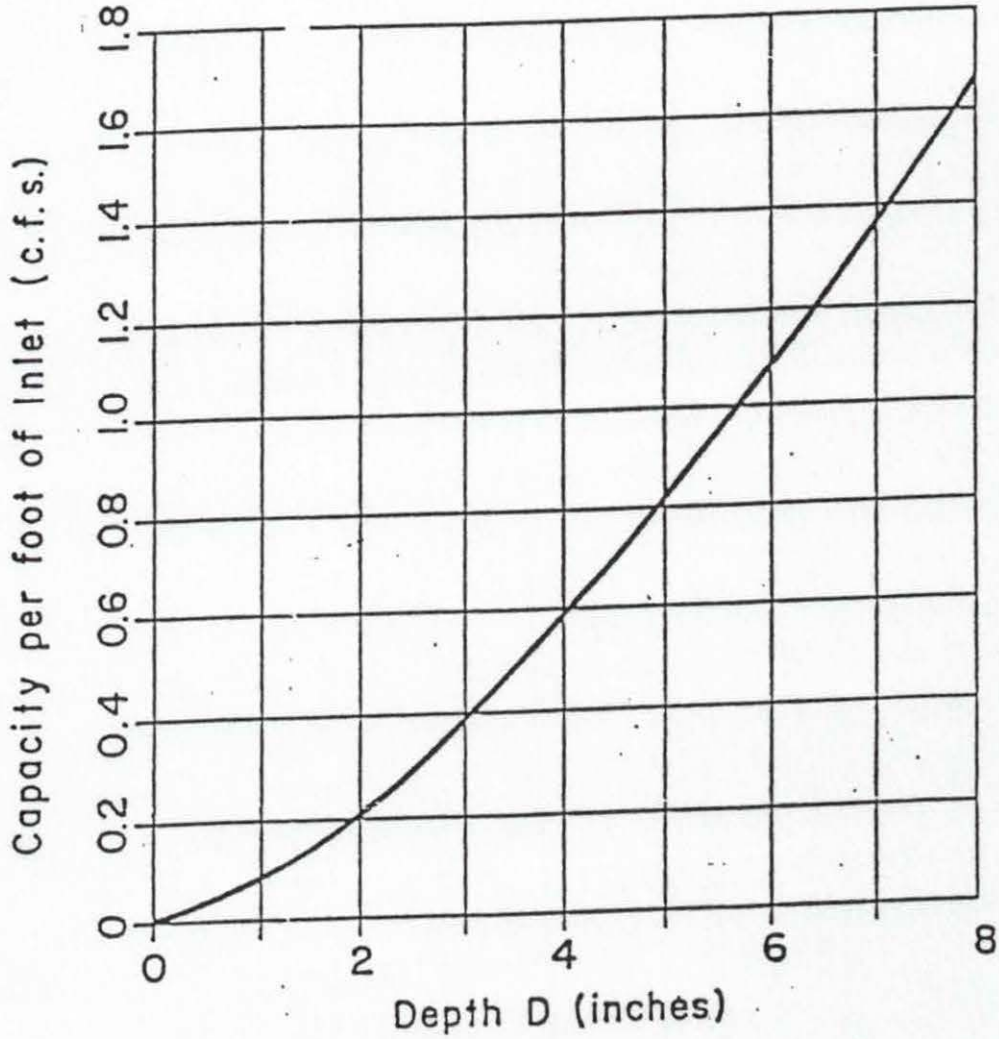

INLET CAPACITY
FOR
LOW POINT INLETS

FIGURE 2

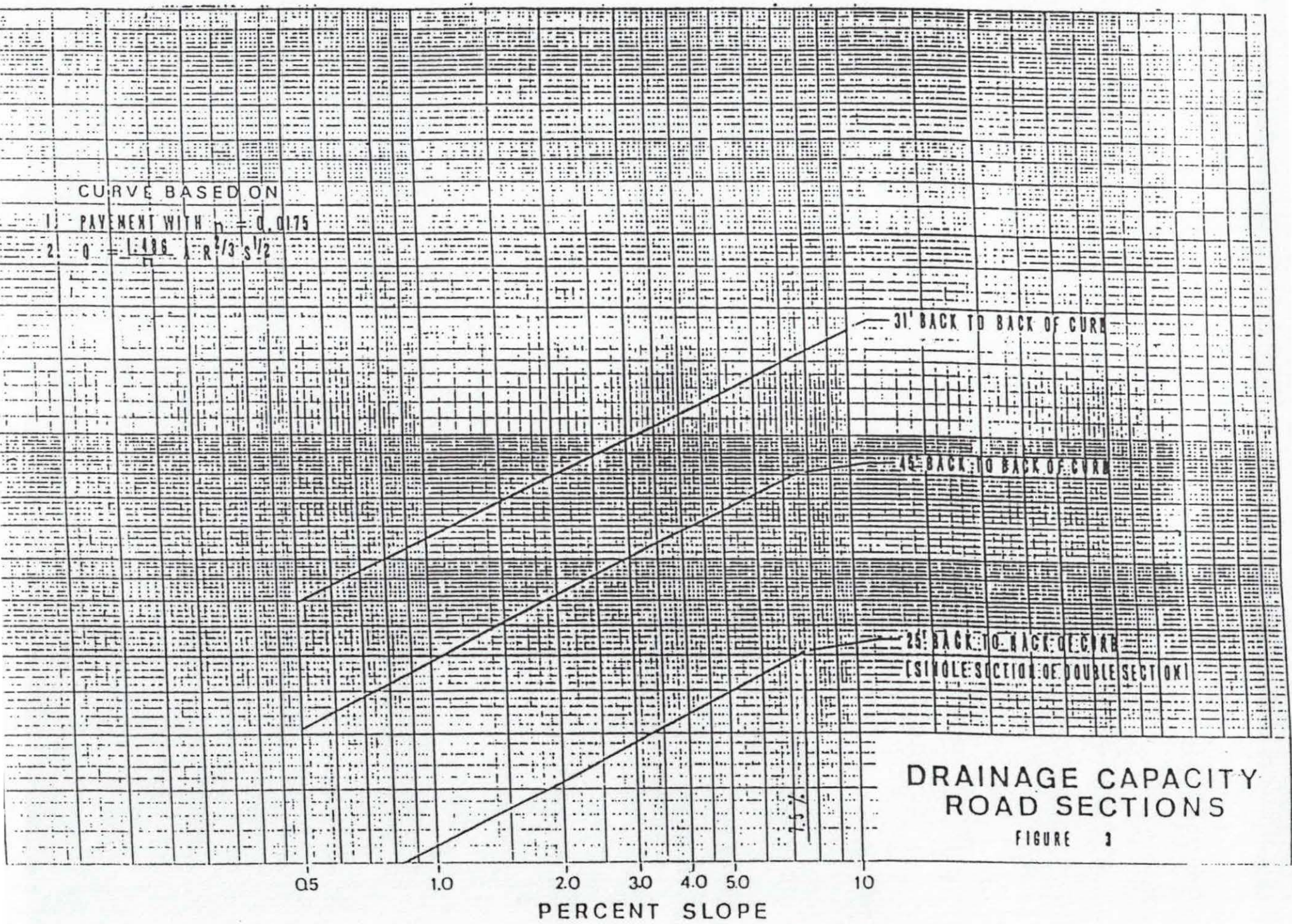

DRAINAGE CAPACITY
ROAD SECTIONS

FIGURE 3

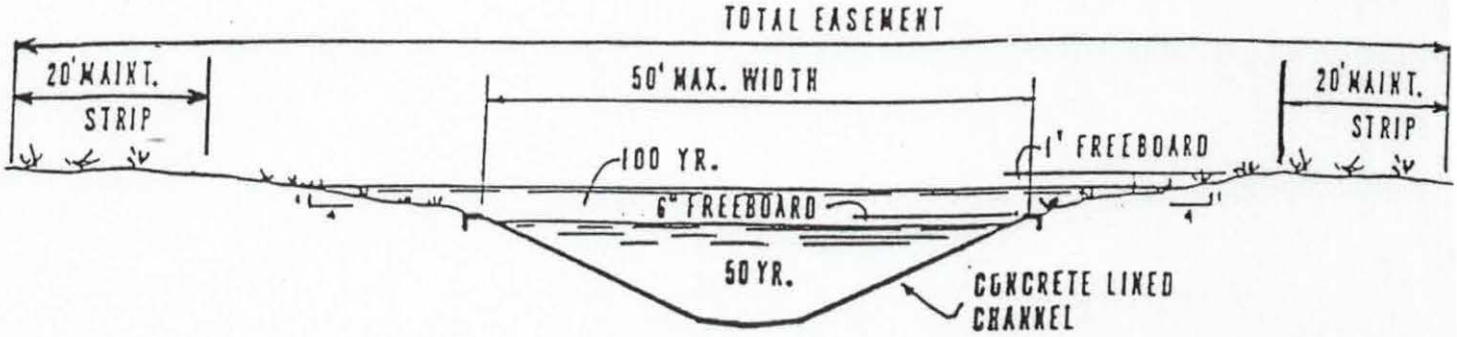

CA LESS THAN 600

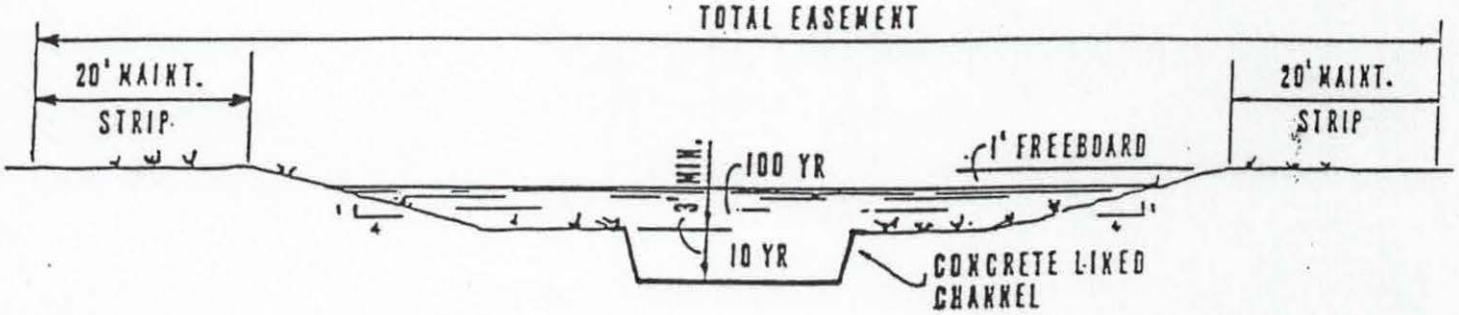

CA BETWEEN 600 & 1,000

NOTE:

CHANNELS DRAINING AREAS EXCEEDING CA FACTOR OF 1,000 SHALL BE DESIGNED TO CARRY THE CAPACITY OF A 100 YEAR FREQUENCY STORM, THE SPECIFIC DESIGN AND TYPE OF CONSTRUCTION IMPROVEMENTS SHALL HAVE SPECIFIC APPROVAL BY THE DIRECTOR OF PUBLIC WORKS OR HIS AUTHORIZED REPRESENTAT

TYPICAL DRAINAGE CHANNEL SECTIONS

ARTICLE IIA

CITY OF MINERAL WELLS

DESIGN GUIDELINES
FOR
SIZING SMALL DETENTION PONDS

ARTICLE IIA

DESIGN GUIDELINES FOR SIZING
SMALL DETENTION PONDS
FOR
CITY OF MINERAL WELLS DRAINAGE ORDINANCE

SECTION 2A.1 General

Design Standards

1. The purpose of this section is to establish minimum standard criteria, principles, procedures and practices for design of drainage improvements and small detention ponds and is not to replace the independent judgement and responsibility of the design engineer.

2. The design factors, formulas, graphs, and procedures presented or referred to herein are intended for use as minimum engineering guides in the design or drainage improvements and small detention ponds.

3. Methods of design other than those indicated or referred to herein may be considered in complex and difficult cases where experience clearly indicates they are preferable; however, these deviations shall not be attempted until approval has been obtained from the City Administrative Officer or his authorized designee. If existing conditions are determined that require greater than the minimum design, it is the responsibility of the design engineer to design accordingly.

4. The methods outlined or referred to herein include accepted principles of drainage design and should be a working supplement to basic design information obtainable from text books and publications on hydrology and hydraulics.

SECTION 2A.2 Minimum Tract Size

Tracts of land of 0.5 acres or less may not require detention or controlled runoff. This would be applicable to existing developed areas not experiencing land use changes. Transitional areas where land use is being converted from single-family residential to higher densities, will require the entire area to be considered instead of the individual tracts.

SECTION 2A.3 Drainage Plan

A drainage plan should be presented on drawings accurately and clearly representing existing and proposed improvements. All areas contributing to the runoff of the site of the proposed improvements shall be shown with contours and/or elevations. Drainage areas shall be numbered and identified in accordance to the areas as identified in the engineering drainage calculations. Computations shown on the drawings shall be submitted to the City supporting the drainage design and shall be in a form as to allow an expedient and

consistent review. The sizes, flows, elevations, capacities and percentage of slope of all drainage improvements shall be shown. Drawings with computations shall be submitted in conformance to the Subdivision Ordinance and sealed by a Registered Professional Engineer in the State of Texas.

SECTION 2A.4 Street Drainage

Street flows shall not exceed a depth which is defined by the Drainage Ordinance. Street shall be designed in accordance to the City's street standards and shall conform to the following:

1. No flattening of the standard street cross slopes shall be allowed for the purposes of obtaining additional hydraulic capacity.

2. Where additional hydraulic capacity is required on the street, the gradient must be increased or curb inlets and storm drains installed to remove a portion of the flow.

3. For noncurbed streets, all flows shall be contained within paralleling roadside ditches.

SECTION 2A.5 Small Urban Area On-Site Detention Ponds

On-site detention facilities have a single purpose of controlling the excess runoff from a particular site or subdivision. A detention facility's use is particularly beneficial in situations where a site's stormwater runoff discharges into a system with limited flow capacity. There are, however, certain minimum standards that must be adhered to within any design. The following is a listing of general as well as some specific design criteria for on-site detention ponds.

1. General Criteria for On-Site Detention

   a. The rate of outflow from the on-site detention facility shall be based on R-4 Residential District developed peak flow. The 100 year return frequency is to be used to determine the volume of detention storage required. In addition, the outlet structure shall be designed such that peak discharges are not increased for storm frequencies from the 5-year up to the 100-year frequency storm.

   b. The rate of inflow to the detention facility must be calculated based on the assumption of full development of the site.

   c. The outlet structures shall be designed on the basis of inlet or outlet control, whichever is applicable. The structures shall be capable of safely and properly passing the runoff flow for the entire drainage area both on and off site for the 100 year return frequency storm. The outflow structure shall discharge flows at a

nonerosive rate.

d. No outlet structures from detention, filtration and/or sedimentation ponds, parking detention or other concentrating structures shall be designed to discharge concentrated flow directly into arterial or collector streets. Such discharges shall be conveyed by a closed conduit to the nearest existing storm sewer. If there is not existing storm sewer within 300 feet, the outlet design shall revert the discharge back to sheet flow, following as nearly as possible the direction of the gutter. Any variances from this design will require approval by the City Administrative Officer.

e. Storm runoff can be detained within parking lots; however, the engineer should be aware of the inconvenience to both pedestrians and traffic. The location of ponding areas in a parking lot should be planned so that this condition is minimized. Stormwater ponding depths in parking lots are limited to an average of eight (8) inches with a maximum of 12 inches for the 100 year return frequency storm.

f. When a site is situated such that off-site flows will be draining through the property and into the pond, provisions must be made in the overflow system for these flows. The engineer should understand that any mixing of on-site with off-site flows tends to produce inefficiencies in the pond. This criteria should not be confused with in-channel detention which is discussed below.

g. A detention pond that is placed within an existing channel that is accessed by more than one development shall be referred to as an in-channel detention pond. In this situation the engineer is required to perform a multihydrograph analysis which details the relationship of the existing site, the developed site with detention, and the channel. There shall be no increase at any point in the rising limb of the hydrographs when comparing the existing and developed detention hydrographs.

h. When designing ponds in series (i.e., when the discharge of one (1) becomes the inflow of another), the engineer shall submit a hydrologic analysis which demonstrates the system's adequacy. This analysis shall incorporate the construction of hydrographs from all inflow and outflow components.

i. Areas which do not discharge into a detention pond (undetained flows) must be accounted for by a reduction in the allowable release rate from the detention pond equal to the discharge from the undetained area.

j. All pipes discharging into a public storm sewer system shall have a minimum diameter of 12 inches and shall be constructed of reinforced concrete. An exception can be made for discharge pipes from a filtration system.

2. Outlet Structure Design

There are two basic types of outlet control structures; those incorporating orifice flow and those incorporating weir flow. Weir flow is additionally broken down into two categories; rectangular and V-notch types. In each type, the bottom edge of the weir over which the water flows is called the crest. Two common types of rectangular weirs are the sharp-crested and broad-crested weirs.

Generally, if the crest thickness is more than 60% of the nappe thickness, the weir should be considered broad-crested. The coefficients for sharp-crested and broad-crested weirs vary. The design engineer shall submit weir coefficients to the City Administrative Officer or his duly authorized designee for approval prior to beginning design of the weir. Weir and orifice flow equations to be used have been taken from the "Handbook of Hydraulics" by Brater and King (Ref.7) and are as follows:

a. Rectangular Weir Flow Equation (Figure 1)

$$Q = CLH^{3/2} \qquad \text{(Eq. 2A.5-1)}$$

where

Q = Weir flow, cubic feet per second
C = Weir Coefficient
L = Horizontal Length, feet
H = Depth of Flow, feet

b. V-notch Weir Flow Equation (Figure 1)

$$Q = C_v \tan (O/2) H^{2.5} \qquad \text{(Eq. 2A.5-2)}$$

where

Q = Weir flow, cubic feet per second
C_v = Weir Coefficient
O = Angle of the Notch at the Apex (degrees)

c. Orifice Flow Equation (Figure 1)

$$Q = C_o A_o (2gH)^{0.5} \qquad \text{(Eq. 2A.5-3)}$$

where

Q = Orifice Flow, cubic feet per second
C_o = Orifice Coefficient (use 0.6)
A_o = Orifice Area, square feet
g = Gravitational Constant, 32.2 ft/sec^2
H = Head on Orifice measured from centerline, feet

3. Detention Pond Storage Determination

There are several methods available for determining the runoff storage volume required for a detention pond. The design engineer shall review the design method to be used with the City Administrative Officer or his duly authorized designee prior to beginning the design of the detention facility. An accepted method to be used for small drainage areas (less than 25 acres) is the Modified Rational Method (MRM). For drainage areas 25 acres and greater, a hydrograph method shall be used.

a. Modified Rational Method (MRM)

The MRM was derived from the Rational Method. This methodology determines the duration which produces the total volume of runoff above the existing peak. The MRM design procedure shall be limited to sites with contributing areas less than 25 acres.

The MRM is based on the same assumptions as the Rational Method. The most significant assumption is that the period of rainfall averaging is equal to the duration of the storm. This means that the rain and the corresponding runoff that occurs before and after the rainfall averaging period are not accounted for. Experience in comparing detention facility volumes obtained with the Modified Rational Method to those obtained with other methods, suggest that significant underestimates of required storage volumes may result for drainage areas larger than 25 acres.

The method also assumes that an urban runoff hydrograph can be approximated as having either a triangular or trapezoidal shape. This assumption is equivalent to assuming that the contributing drainage area increases approximately linearly with time; that is, there is a linear area-time relationship for the drainage area.

The MRM is a graphical procedure to estimate the detention storage volume. The Modified Rational Method graphical procedure is only applicable for detention storage volume estimation for a single-storm event and shall not be used when a storage routing procedure is required.

b. MRM - Graphical Procedure

The following is a procedure for applying the graphical method presented by Franklin C. Houston, P.E., at the International Symposium on Hydrology, Hydraulics and Sedimentation at the University of Kentucky (Ref. 9). This method is limited to a drainage area of less than 25 acres.

Step 1. Use the 100 year return frequency storm for determining the maximum runoff.

Step 2. Determine the maximum allowable release rate (Q_A) (peak flow for pre-condition R-4 Residential District for the site and plot as a horizontal line as shown in Figure 2.

$Q_A = C_A 1A$ (Eq. 2A.5-4)

Q_A = Maximum Allowable Release Rate

C_A = Runoff Coefficient for R-4 Residential District (use 0.5)

I = Rainfall Intensity (in/hr)

A = Drainage Area (acres)

Step 3. Determine the hydrologic data for the proposed post-condition drainage area. This includes the contributing area, runoff coefficient and time of concentration in the developed condition.

Step 4. Utilizing the development post-condition time of concentration determined in Step 3, draw a corresponding vertical line as shown in Figure 2.

Step 5. Select storm durations and calculate the peak flow (Q_P) for post-conditions based on multiples of the developed post-condition time of concentration. When a duration results in a Q_P value less than Q_A, this step is complete.

Q_P is expressed as a function of the storm duration. The equations for the Rational Method and rainfall intensity to be used are as follows:

$Q_P = C_P\ i_D$ (Eq. 2A.5-5)

where

Q_P = Peak Flow Rate for proposed post-conditions, cubic feet per second

C_P = Runoff Coefficient for proposed development post-conditions

A_P = Contributing Drainage Area for proposed developed post-conditions, acres and

$$i_D = \frac{b}{(t_D + d)^e} = \text{Rainfall Intensity (in/hr)} \quad \text{(Eq.2A.5-6)}$$

where

t_D = Specific storm duration in minutes. The b, d and e coefficients in Table 1 below are taken from Table 6 in the Texas State Department of Highways and Public Transportation, Bridge Division, Hydraulic Manual (Ref. 8).

Table 1

Coefficients for Equation

Storm Frequency	e	b	d
5-year	0.772	61	8.1
10 year	0.770	72	8.1
24 year	0.785	89	8.1
50 year	0.772	96	8.1
100 year	0.765	103	7.7

Step 6. As shown in Figure 2, Construct hydrographs based on the proposed post-condition peak flows and on the storm durations selected in Step 5 and illustrated in Figure 2.

Step 7. Connect a line from the origin to the intersection point of the allowable release rate line and the recession limb of the hydrograph for each duration. The required storage is represented by the difference between the triangular outflow hydrograph, which is below the release rate line and the total trapezoidal inflow hydrograph. This is depicted as the cross-hatched area in Figure 2.

Step 8. The engineer should proceed to the detention pond design.

The volume of storage required for the detention ponds as depicted in Figure 2, can be arithmetically calculated as follows:

The volume under trapezoidal inflow hydrograph is

$$V_I = 60(1/2)(Q_P)[t_D-t_C)+(t_D+t_C)] \text{ (Ref.9)} \qquad \text{(Eq. 2A.5-7)}$$

where

t_C = Time of Concentration, minutes

t_D = Time of Duration, minutes

Q_P = Peak Flow, proposed post-conditions, cubic feet per second

and the volume under the triangular outflow hydrograph is

$$V_o = 60(1/2)(Q_A)(t_D+t_C) \text{ (Ref.9)} \qquad \text{(Eq. 2A.5-8)}$$

where

QA = Maximum Allowable Release Rate, peak flow precondition, cubic feet per second

The volume of storage required by the detention pond is the difference of the above two volumes.

V_R = Volume of Storage required

$$V_R = (Q_P)[t_D-t)+(t_D+t_C)]-60(1/2)(Q_A)(t_D+t_C)$$

$$V_R = 60(Q_P)(T_D)-(30(Q_A)(t_D+t_C)) \qquad \text{(Eq. 2A.5-9)}$$

A situation may occur where stormwater runoff does not flow through the detention pond, yet must be addressed in the design. This situation of "by-pass" requires the maximum allowable release rate be reduced by the peak flows generated from areas that by-pass the pond. These peak flows are calculated from the Rational Method, using the time of concentration for the given area and the corresponding rainfall intensity for the specific return period of the storm. The MRM procedures shall not be used for situations involving multiple-ponds where the outflow from one pond flows to another pond.

c. MRM - Example:

The following example will illustrate the application of the Graphical and Equation procedures in the solution of a small detention pond storage calculations using the Modified Rational Method.

GIVEN: A drainage area has the following characteristics for the pre-condition and post-condition.

<u>Pre-Condition:</u>
R-4 Residential District
Drainage Area = 3 acres
Composite runoff coefficient C = 0.5
Time of concentration (t_c) = 5 minutes

<u>Post-Condition:</u>
Drainage Area = 3 acres
Composite runoff coefficient C = 0.85
Time of concentration (t_c) = 5 minutes

REQUIRED: A detention pond is needed to control the excess storm runoff. Find the detention storage volume required.

SOLUTION:

Step 1. Detention ponds are to be sized based on a 100-year return frequency storm.

Step 2. The peak flow from pre-conditions R-4 Residential District can be calculated by the Rational Method (Eq. 2A.5-4). The rainfall intensity for a 100-year storm with a 5 minute time of concentration is 14.74 inches per hour (see Eq. 2A.5-6) and Table 2A-1).

$Q_P = CIA$
$Q_P = 0.50 \times 14.74 \times 3$
$Q_P = 22$ cfs

This peak flow of 22 cubic feet per second is used as the maximum allowable release rate for the post-condition. A horizontal line representing this release rate is plotted and illustrated in Figure 3.

Step 3. A vertical dashed line corresponding to the developed time of concentration of 5 minutes is then drawn as illustrated in Figure 3.

Step 4. Based on multiples of the developed time of concentration, construct the inflow hydrographs for storm durations of 5, 10, 15, 20 and 25 minutes. The corresponding rainfall intensities and peak flows calculated from the Rational Method are shown in the following table.

Table 2

Rainfall Duration (Minutes)	Intensity (in/hr)	Peak Flow (cfs)
5	14.74	37.6
10	11.43	29.1
15	9.45	24.1
20	8.12	20.7
25	7.15	18.2

Step 5. Draw a line connecting the origin and intersection point of the allowable release rate line and the recession limb of each inflow hydrograph. Determine the corresponding storage volumes for each duration using Eq. 2A.5-9. Note that the calculation of volume for the duration of 25 minutes was not necessary since the storage curve had already exhibited a descent at 20 minutes. In addition, the 20 minute and 25 minute storm duration are not shown on Figure 3 and they both would be below the maximum allowable release rate.

Table 3

Rainfall Duration Minutes	Storage Cu. Ft.
5	4643
10	7538
15	8422
20	8264
25	7450

Step 6. The storage volume required is 8422 cubic feet for the detention pond.

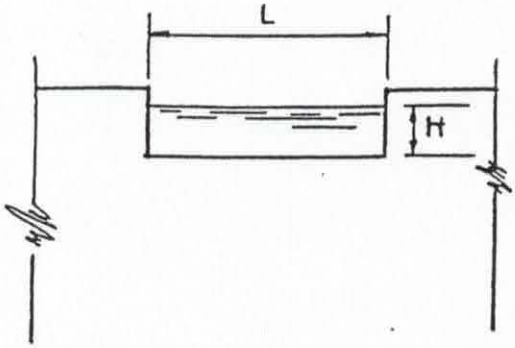

RECTANGULAR WIER

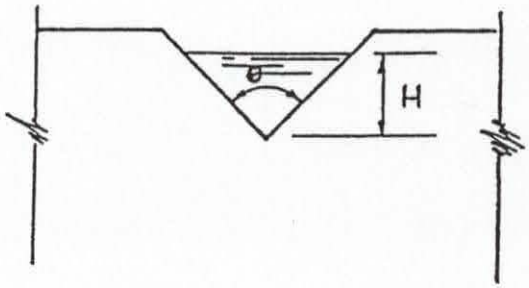

V-NOTCH WIER

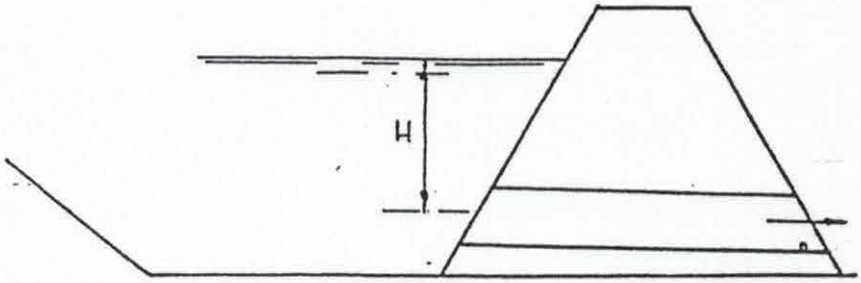

ORIFICE DESIGN

WIER AND ORIFICE FLOWS

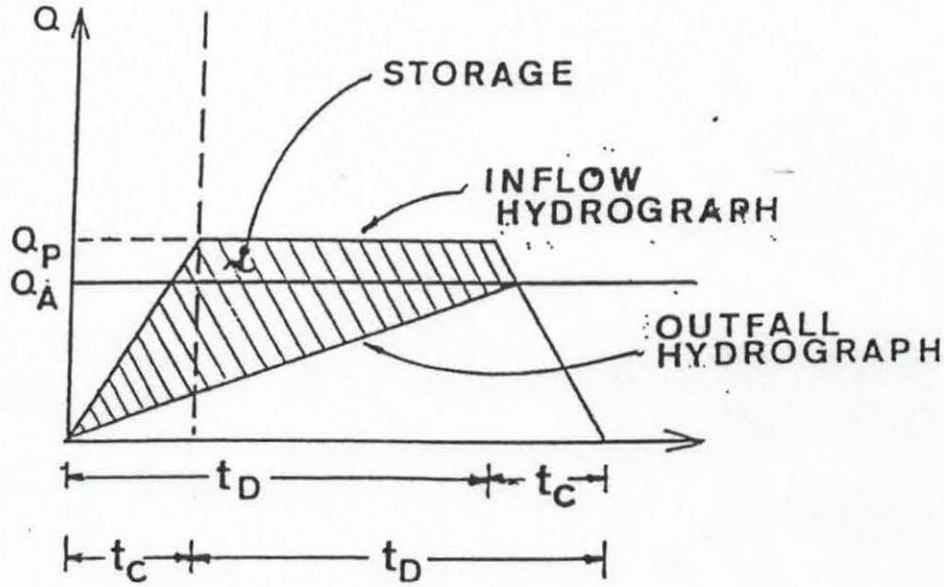

t_C :time of concentration (minutes)

t_D :time of duration (minutes)

Q_P :peak flows (cfs)

Q_A :maximum allowable release rate (cfs)

MODIFIED RATIONAL METHOD — SCHEME

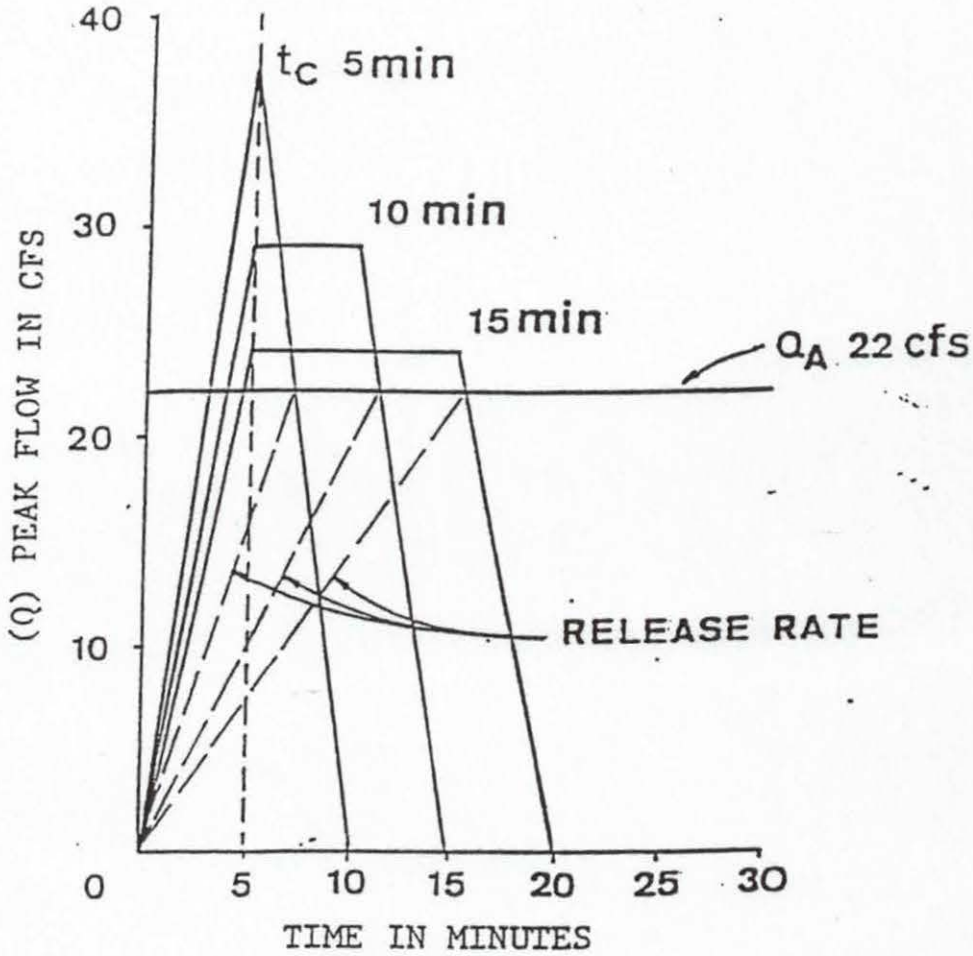

EXAMPLE OF MODIFIED RATIONAL METHOD HYDROGRAPH

ARTICLE III

CITY OF MINERAL WELLS

DESIGN STANDARDS FOR WATER SYSTEMS

ARTICLE III

WATER SYSTEM

SECTION 3.1 General

The purpose of this section is to establish minimum standard criteria for design of water distribution systems to serve development within the City of Mineral Wells.

The engineer responsible for the design of the proposed improvements shall submit testing reports performed by the Engineer of an independent testing laboratory with a verification statement to the Director of Public Works that the improvements have been constructed in accordance with the plans and specifications.

SECTION 3.2 Line Size

The minimum pipeline size to serve residential areas shall be six (6) inches in diameter and the minimum pipeline size serving commercial, business, industrial, and multi-family shall be eight (8) inches. In general, all water lines shall be looped with no dead ends. Dead end lines shall be provided with a flush valve or fire hydrant at the end. Dead end lines shall not exceed 500 feet in length without prior approval of the City. Pipelines shall be sized to provide sufficient supply for fire flows in accordance with the minimum criteria of the Texas Commission on Fire Protection and other governing authorities.

SECTION 3.3 Pipe Material

Water pipelines shall be either ductile iron (polywrapped), polyvinyl chloride (PVC) C-900, or concrete cylinder. In general, all water pipelines shall be minimum Class 150. Ductile iron pipe shall be a minimum Class 50 with a cement mortar liner. All service lines shall be Type "K" copper tubing. All pipe shall be new and approved by the Underwriters' Laboratory and shall be acceptable to the Texas Commission on Fire Protection for use in water distribution systems without penalty. PVC water pipe shall also bear the seal of approval of the National Sanitation Foundation Testing Laboratory (NSF) for potable water pipe.

SECTION 3.4 Fittings

All fittings shall be cast iron or ductile iron (polywrapped) and shall comply with American Water Works Association Standard Specification AWWA C110 or AWWA C111. Below grade fittings shall be mechanical joint. Adequate thrust blocking shall be provided at all fittings. Above grade fittings shall be flanged joints. Concrete cylinder pipe fittings shall be of the same material as the pipe. All copper fittings shall be compression fittings. No flare fittings shall be permitted.

SECTION 3.5 Fire Hydrants

In general, fire hydrants shall be located at each street intersection and at intervals on the interior of each block. Spacing of fire hydrants in single family residential areas shall not be over 500 feet apart along the street. Spacing of fire hydrants in the commercial, industrial or high density residential areas shall not be over 300 feet apart along the street. In all cases, the fire hydrant shall be within 500 feet of any portion of a building. If special conditions exist, the Fire Marshall may require additional hydrants for fire protection.

All fire hydrants shall be installed on a minimum six (6) inch main. There shall be a gate valve installed between the main and hydrant. Fire hydrants shall be located between five (5) and six (6) feet back of the curb.

All fire hydrants shall be three way feed with one pumper nozzle of 4.5 inches and two hose nozzles of 2.5 inches. The operating nut shall be a one and one half (1½) inch pentagonal and shall open by turning to the left counterclockwise. Threads shall be compatible with existing fire department equipment.

Fire hydrants shall be painted to meet the City's requirement for color code. In general, the developer shall furnish hydrants that have base and bonnet painted with a red paint. After the City performs the fire flow tests on the hydrant, the City will paint the bonnet with a color which corresponds to the flow on which it is located as shown in the following table:

Fire Hydrant Color Code

Main Flow Capacity	Color of Bonnet & Caps
0-500 gpm	Vermillion Red
500-1000 gpm	Orange
Greater than 1000 gpm	Green

SECTION 3.6 Gate Valves

All gate valves shall be resilient seat gate valves. All gate valves sixteen (16) inches and larger shall be furnished with by-pass valves. For valves sixteen (16) and larger, butterfly valves may be used as an alternative to gate valves. Any proposed alternative valves shall be submitted to the Director of Public Works for approval prior to installation. Valves shall open by turning counterclockwise and shall have a two (2) inch operating nut.

In general, gate valves shall be located at intersections to allow the isolation of line for repairs. Valves shall be placed so that not more than five (5) lots will be out of service while a line is shut down for repair. All valves shall be installed in the vertical position with a valve box and cover centered over the

stem. A two (2) foot square and six (6) inch thick concrete pad shall be constructed around the top of the valve box in unpaved areas.

SECTION 3.7 Testing and Sterilization

All water pipelines shall be hydrostatically tested. The test shall include service lines, fire hydrants, flush valves, etc. and all testing shall be accomplished in the presence of a representative of the City of Mineral Wells. The developer shall be responsible for all expenses required to hydrostatically test the pipelines.

All facilities shall be flushed and sterilized. The developer will be required to submit samples to an approved laboratory for certification as being free of bacteria. The developer shall be responsible for sterilization and resterilization as necessary and all associated expenses. This shall be performed in the presence of a representative of the City.

SECTION 3.8 Location and Installation

All water mains shall be located four (4) feet behind the curb on the north/east side of the street. Installation shall be at the line and grade as shown on the plans. The mains shall have a minimum of forty-eight (48) inches of cover in open areas. Water lines under existing streets and proposed streets shall have a minimum cover of forty-eight (48) inches from the finish grade of proposed pavement. Special attention shall be given to water lines in unimproved streets in order to provide for the future grading of those streets.

Water lines shall be embedded and backfilled. For trenches located in streets the backfill shall be compacted to a minimum of 95% Standard Proctor Density.

All bends, fittings, etc. shall have concrete thrust blocking provided.

A tracer line shall be installed in conjunction with all installations and shall be terminated at each valve location. The tracer line shall be installed twelve (12) inches above the pipe and shall be a 10 gauge insulated, colored blue.

ARTICLE IV

CITY OF MINERAL WELLS

DESIGN STANDARDS FOR SANITARY SEWERS

ARTICLE IV

SEWER SYSTEM

SECTION 4.1 General

The purpose of this section is to establish minimum standard criteria for design of sewer systems to serve development within the City of Mineral Wells.

The engineer responsible for the design of the proposed improvements shall submit testing reports performed by the engineer of an independent testing laboratory with a verification statement to the Director of Public Works that the improvements have been constructed in accordance with the plans and specifications.

SECTION 4.2 Pipe Size and Grades

The minimum line size shall be six (6) inches in diameter. Sanitary sewer lines shall be designed to have a minimum mean velocity flowing full of 2.0 feet per second (fps). The minimum slope of the sewer lines shall conform to the minimums recommended by the TNRCC and the maximum velocity shall not exceed 10 fps.

SECTION 4.3 Pipe Material

Sanitary sewer pipe shall be polyvinyl chloride pipe (PVC) SDR with SDR26 utilized for depths greater than eight (8) feet.

All pipe shall be new and approved by the Underwriter's Laboratories, Inc. and the PVC pipe shall also bear the seal of approval of the National Sanitation Foundation Testing Laboratory (NSF).

SECTION 4.4 Manholes

Manholes shall be located at all intersections of sewer pipelines, changes in grade, changes in alignment and at distances not to exceed 500 feet. Manholes shall be constructed of precast reinforced concrete pipe, cast-in-place, or fiberglass. Brick manholes will not be allowed. Water tight, size on size resilient connectors allowing for differential settlement shall be used to connect pipe to manholes. Pipe to manhole connectors shall conform to ASTM C-923.

All manholes shall have twenty-four (24) inch standard manhole rings and covers. Covers shall have pick bars and the words "sanitary sewer" visible in the casting. Water tight rings and covers shall be furnished in areas subject to flooding and installed in accordance with TNRCC regulations.

SECTION 4.5 Drop Manhole

Drop manholes shall be used at locations where the elevation of the incoming sewer line is two (2.0) feet or greater from the elevation

of the outgoing line. Construction shall be the same as the standard manhole. The drop piping shall be PVC pipe. Inside or outside drops will be permitted.

SECTION 4.6 Cleanouts

Cleanouts shall be constructed at the upper end of all sewer mains. Cleanouts shall be constructed of the same material and same size as the sewer main with a plug. The top shall have a cast iron boot with cover. A two (2) feet by two (2) feet nine (9) inches by six (6) inches thick concrete pad shall be placed around this boot.

SECTION 4.7 Services

Services shall be provided for each lot, tract, parcel, or subdivided property. Minimum service shall be four (4) inches in diameter. Services shall be located five (5) feet upstream of downstream property line. Each service shall be provided with a cleanout at property or easement line.

SECTION 4.8 Force Main

Force main materials and installation shall be in accordance with Article III, Water System and in accordance with TNRCC regulations.

SECTION 4.9 Lift Stations

Lift stations shall be designed in accordance with the criteria of the TNRCC. Design data will be submitted to the City of Mineral Wells and TNRCC and approved on a case-by-case basis.

SECTION 4.10 Testing

All sewer pipe shall have deflection tests performed on them. This test shall be conducted after the final backfill has been in place at least 30 days. No pipe shall exceed the manufacturer's recommended deflection. Tests shall be performed using a properly sized "go - no go" mandrel.

All sewer lines shall be tested for infiltration/exfiltration. The method of testing the pipe shall be by using the "Low-Pressure Air Test". All manholes shall be tested by using vacuum or hydrostatic methods in accordance with City standard specifications. All testing shall be conducted in the presence of a City representative. All expenses for this work shall be the developer's responsibility.

SECTION 4.11 Location and Installation

All sewer mains shall be constructed on the opposite side of the street from the water mains. Sewer mains shall be constructed to the line and grade as shown on the plans. Manholes shall be located at lot lines whenever possible. The sewer line shall be located four (4) feet from the centerline of proposed pavement. Manholes shall not be located in the bottom of drainage channels.

Manholes shall be located in the maintenance strips provided.

Sewer lines shall be embedded and backfilled. For trenches located in streets, the backfill shall be compacted to a minimum of 95% Standard Proctor Density.

A tracer line shall be installed with PVC pipe and be terminated in each manhole. The tracer line shall be installed twelve (12) inches above the pipe and shall be a 10 gauge insulated green wire.

APPENDIX A

ENGINEERING STANDARD DETAILS

PLATES D-1 thru D-20	PAVING AND DRAINAGE
PLATES W-1 thru W-9	WATER DISTRIBUTION SYSTEM
PLATES SS-1 thru SS-8	SANITARY SEWER SYSTEM
PLATES 1 thru 8	PIPE TRENCH DETAILS

PAVING AND DRAINAGE

DETAILS	PLATE
STANDARD MEDIAN CURB & GUTTER	D-1
MONOLITHIC CURB	D-2
PLAN - JOINT SPACING	D-3
TRANSVERSE & LONGITUDINAL CONSTRUCTION JOINT	D-4
TRANSVERSE EXPANSION JOINT	D-4
TRANSVERSE CONTRACTION JOINT	D-5
TRANSVERSE OR LONGITUDINAL (SAWED DUMMY JOINTS)	D-5
REINFORCING HALF PLAN CONCRETE PAVEMENT	D-6
4'-0" TO 6'-0" SQUARE STORM DRAIN MANHOLE	D-7
STORM DRAIN MANHOLE WALL REINFORCING SCHEDULE	D-8
15' AND 20' CURB INLETS	D-9
TYPICAL CURB INLET SECTION	D-10
TYPICAL SIDEWALK DETAILS	D-11
TYPICAL STANDARD 24" CONCRETE CURB AND GUTTER	D-12
TYPICAL SECTION PCC PAVEMENT - PRIMARY THOROUGHFARE	D-13
TYPICAL SECTION PCC PAVEMENT - SECONDARY THOROUGHFARE	D-14
TYPICAL SECTION PCC PAVEMENT - COLLECTOR	D-15
TYPICAL SECTION PCC PAVEMENT - LOCAL STREET	D-16
TYPICAL SECTION FLEXIBLE PAVEMENT - COLLECTOR	D-17
TYPICAL SECTION FLEXIBLE PAVEMENT - LOCAL STREET	D-18
TYPICAL DRIVEWAY APPROACH DETAILS	D-19
GENERAL STRUCTURAL NOTES	D-20

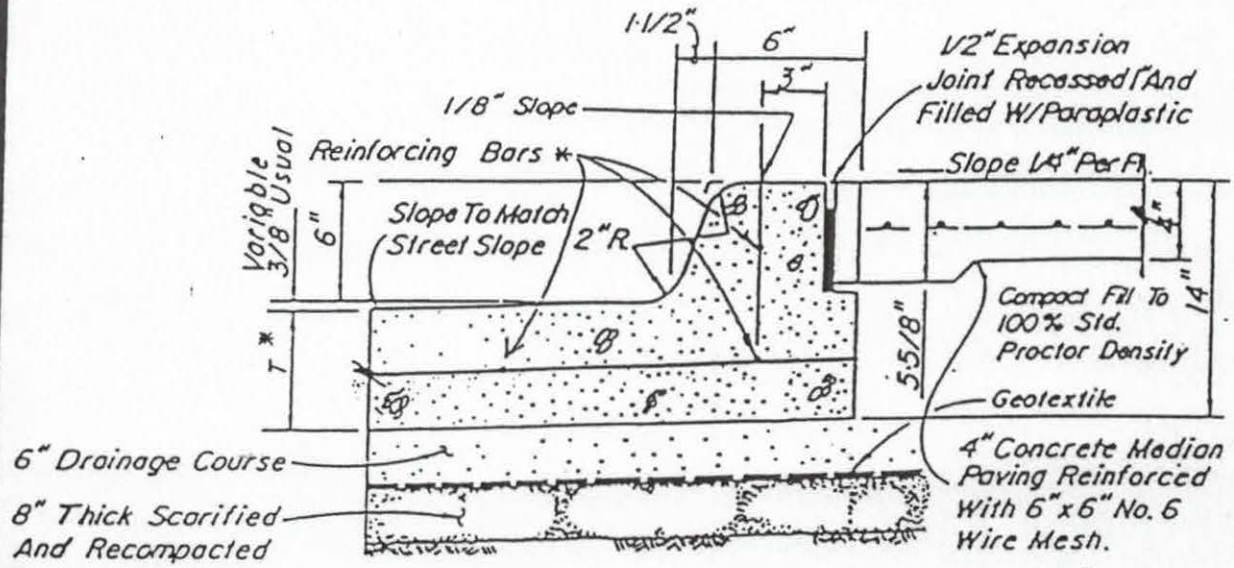

STANDARD MEDIAN CURB & GUTTER

* See Notes 1,2 & 3 On Plate D-2.

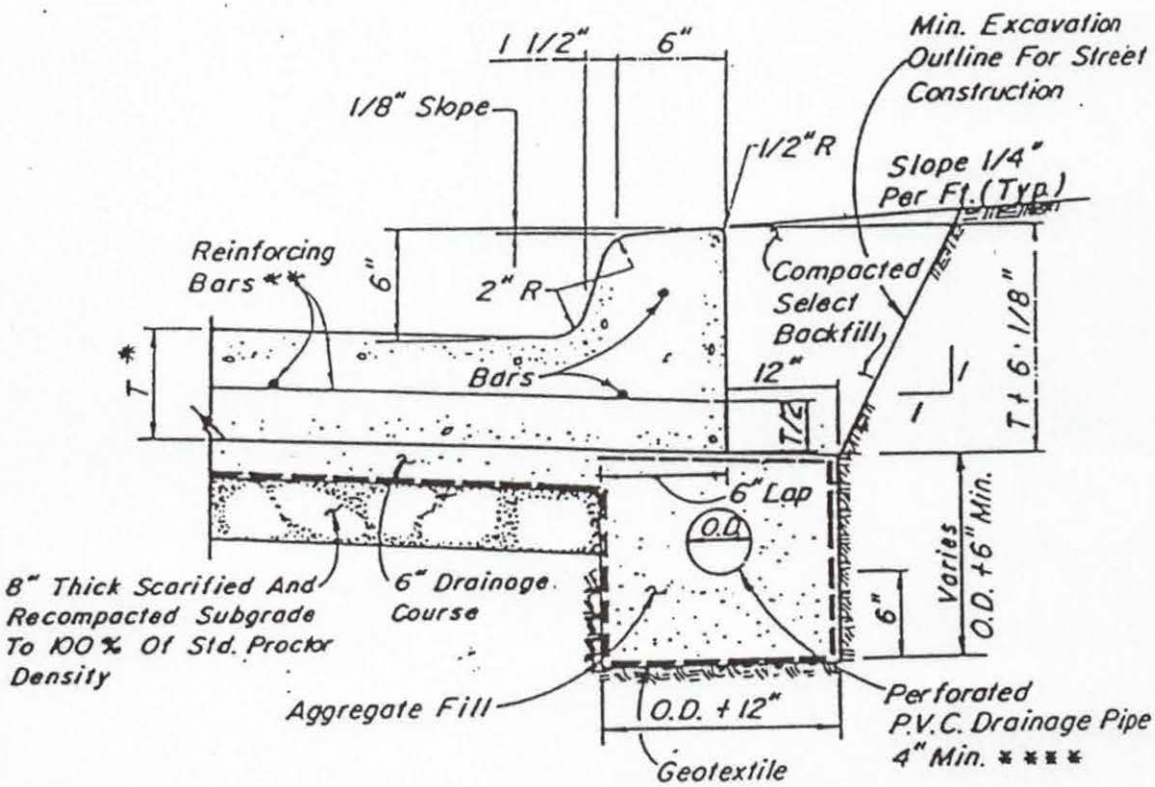

Notes:

* 1. Dimension "T" Equals Pavement Thickness As Designed In Accordance With Section 1.2

** 2. Reinforcing Bar Size And Spacing Shall Be Designed In Accordance With Section 1.2

*** 3. % Lime Or Cement For Stabilized Subgrade Shall Be Designed In Accordance With Section 1.2

**** 4. Roadway Underdrain System Shall Be Designed In Accordance With Article I, Section 1.3

MONOLITHIC CURB

Not To Scale

PLATE D-2

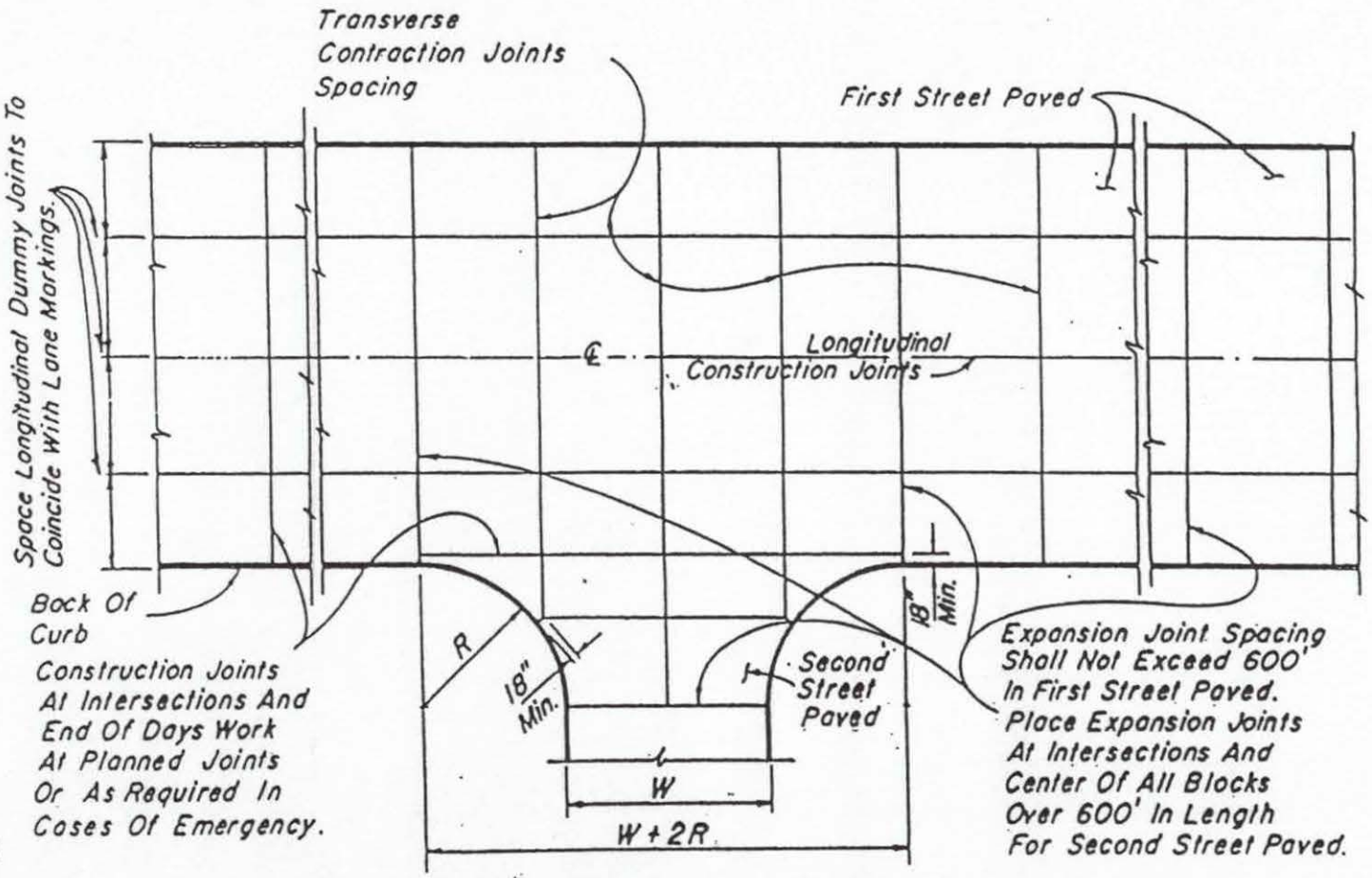

PLAN - JOINT SPACING

Not To Scale

PLATE D-3

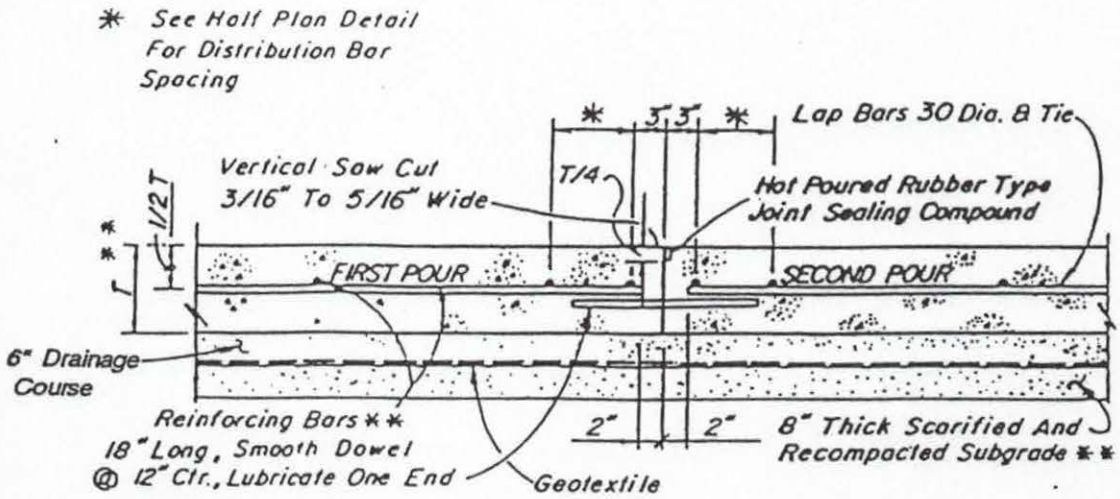

TRANSVERSE & LONGITUDINAL CONSTRUCTION JOINT

(PLANNED – USED AT NORMAL JOINT SPACINGS)

Not To Scale

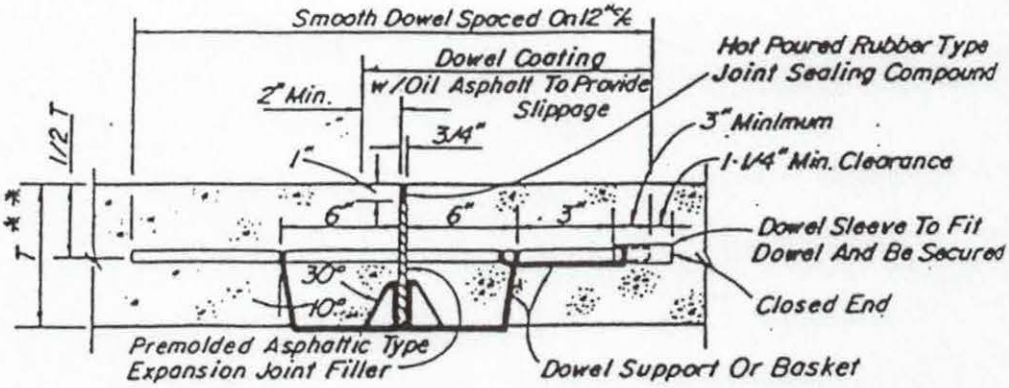

* See Half Plan Detail For Distribution Bar Spacing

TRANSVERSE EXPANSION JOINT

Not To Scale

** See Notes 1, 2 & 3 On Plate D-2.

Notes: Transverse & Longitudinal Reinf. Not Shown For Clarity. Reinf. Does Not Cross Joint. End 2" Back From Joint.

Maximum Spacing Of 600' To Be Used On Expansion Joints.

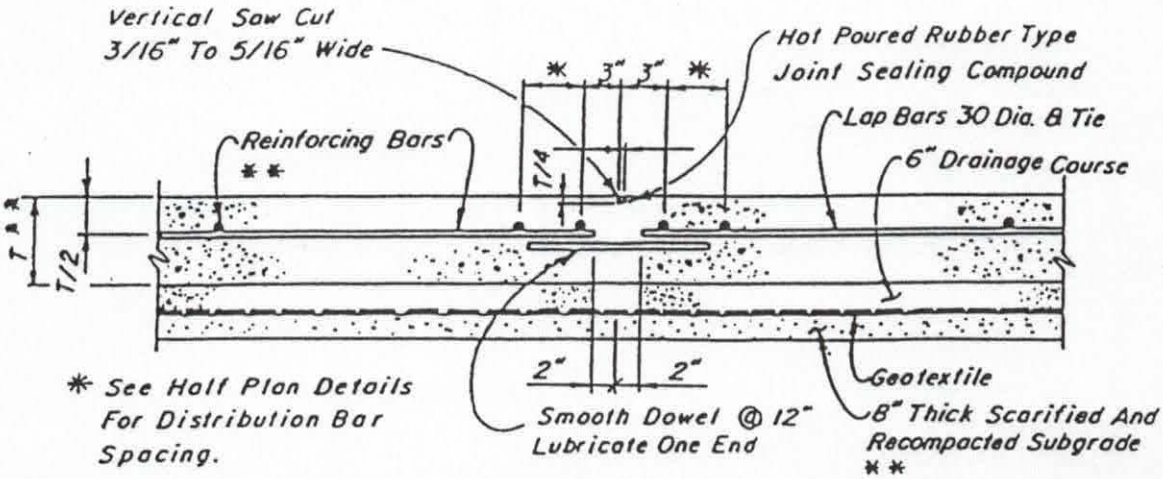

TRANSVERSE CONTRACTION JOINT

Not To Scale

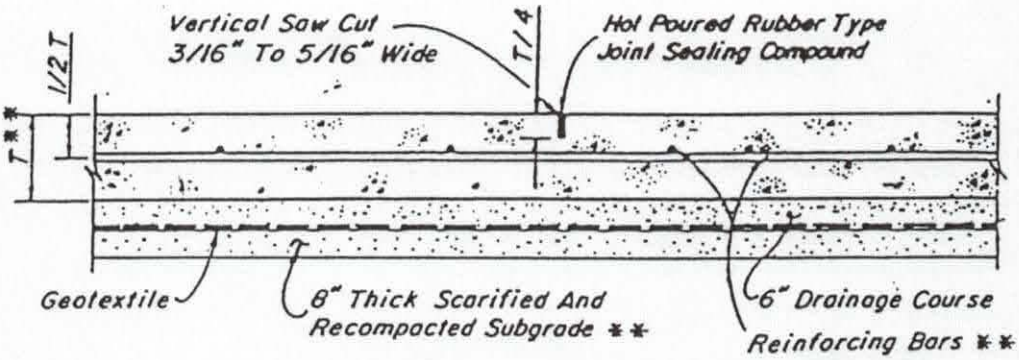

LONGITUDINAL OR TRANSVERSE
(SAWED DUMMY JOINTS)

Not To Scale

** See Notes 1,2 & 3 On Plate D-2.

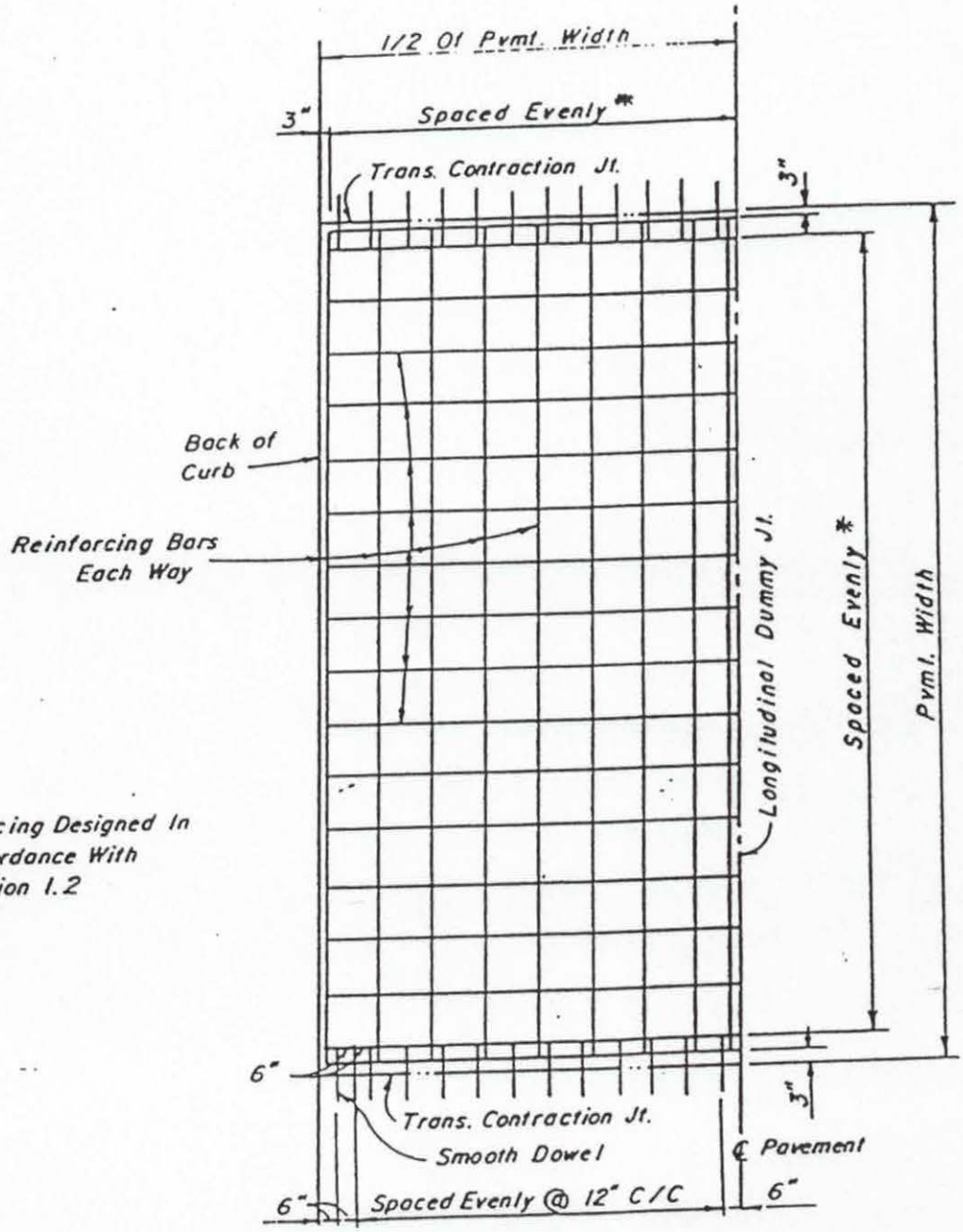

HALF PLAN — CONC. PAVEMENT

Not To Scale

PLATE D-6

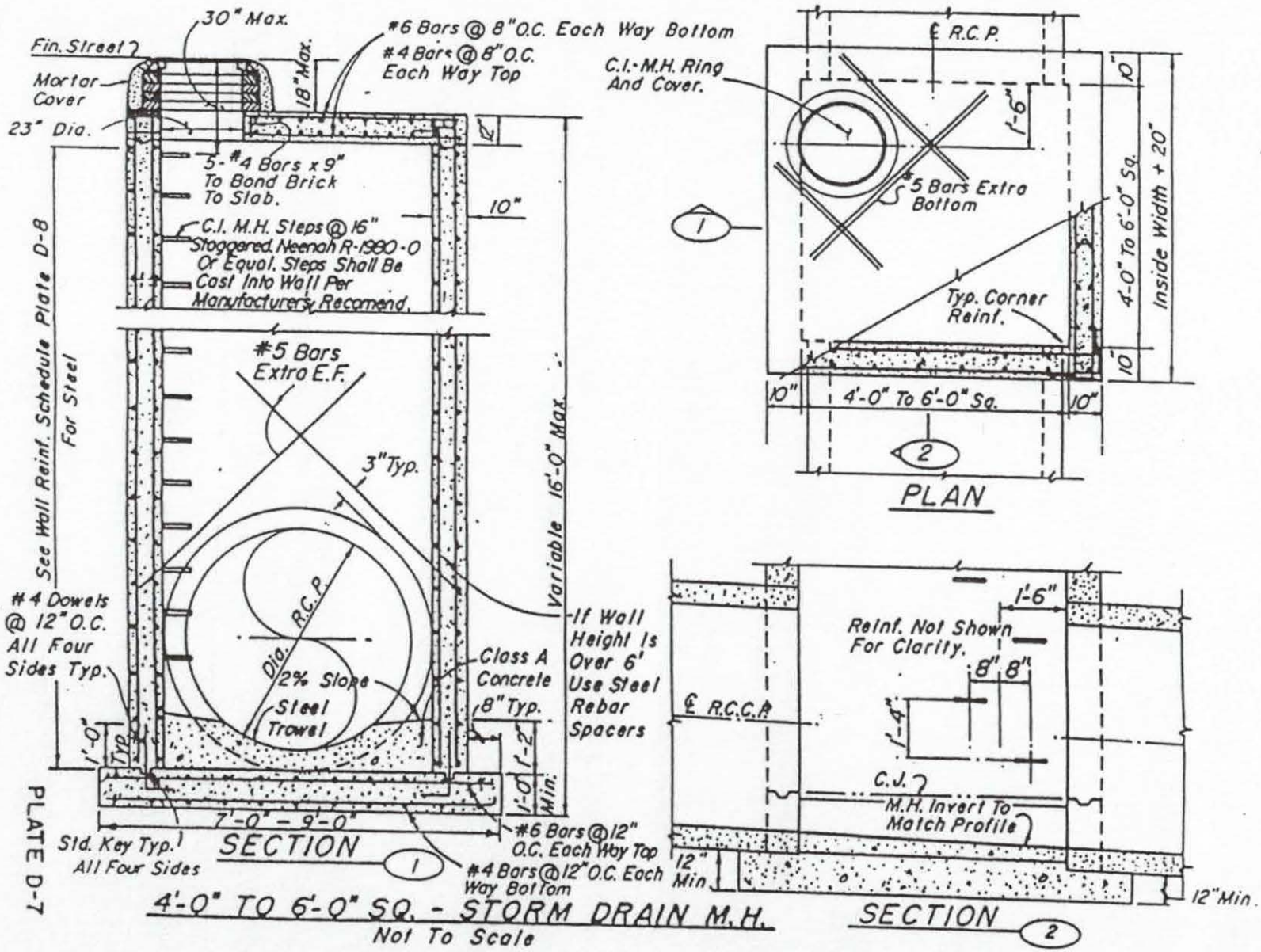

PLATE D-7

4'-0" TO 6'-0" SQ. - STORM DRAIN M.H.

Not To Scale

WALL REINFORCING SCHEDULE

INSIDE BOX WIDTH	WALL HEIGHT	BAR SIZE AND SPACING	
		HORIZONTAL	VERTICAL
4'-0"	0 - 16'	#5 @ 12" Each Face	#4 @ 12" Each Face
4'-6" - 6'-0"	0 - 6'	#5 @ 12" Each Face	#4 @ 12" Each Face
4'-6" - 6'-0"	6' - 16'	#7 @ 12" Each Face	#4 @ 12" Each Face

NOTES: Gutter Construction In Front Of Inlet As Shown Is To Be Considered As Part Of Same.
All Exposed Surfaces Are To Be Trowell Finished.

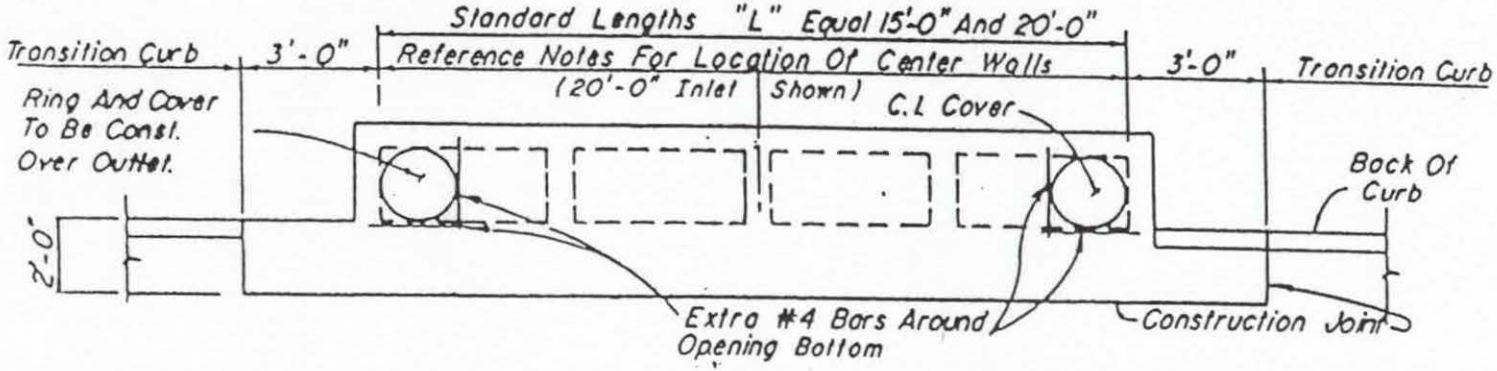

PLAN

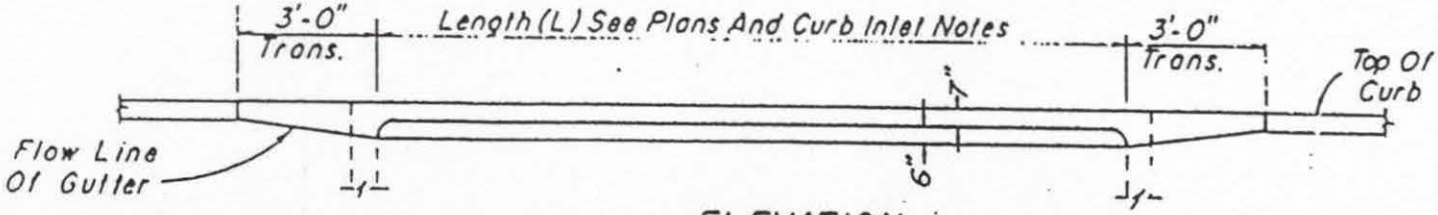

ELEVATION

15' AND 20' CURB INLETS

Not To Scale

CURB INLET NOTES

1. Provide 8" Beam Wall At 5'-0" Intervals For 15'-0" And 20'-0" Inlets. Two Walls For 15'-0" Inlet And Three Walls For The 20'-0" Inlets.
2. Provide Two Frames And Covers For 15'-0" And 20'-0" Inlets
3. Provide Manhole Steps At Each Manhole (Neenah R-1980-0 or Approved Equal)
4. Min. Curb Inlet Size Shall Shall Be 8'-0" in Length.

SECTION TYPICAL CURB INLET

Not To Scale

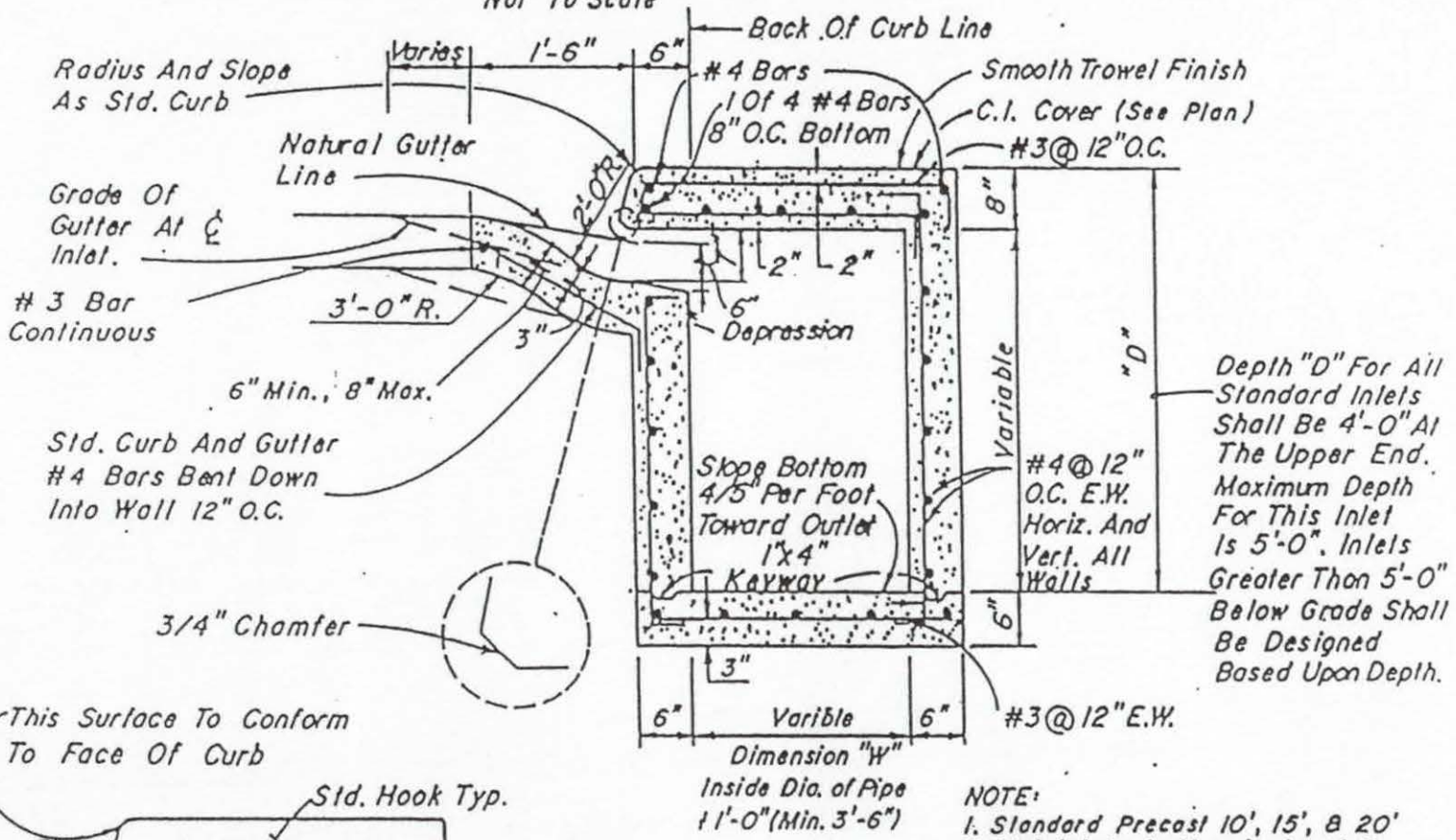

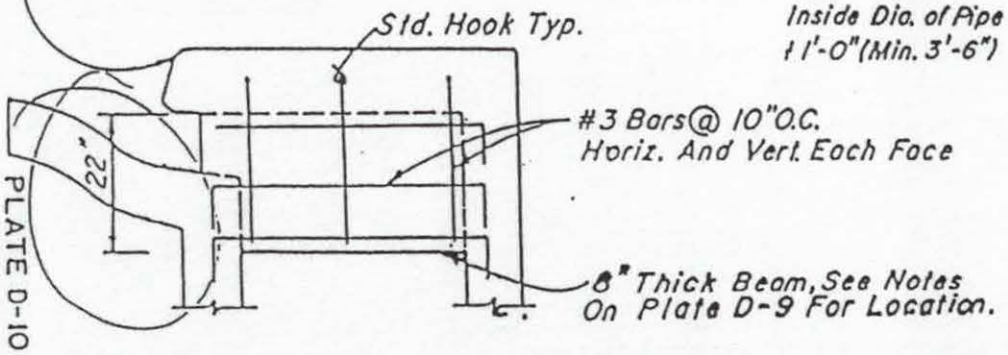

NOTE:

1. Standard Precast 10', 15', & 20' Curb Inlets As Manufactured By Gifford Hill Inc. Or Dalworth Quiksel Co. May Be Used As An Alternative Curb Inlet If Approved Director of Utilities

2. Min. Curb Inlet Size Shall Be 8'-0" In Length.

PLATE D-10

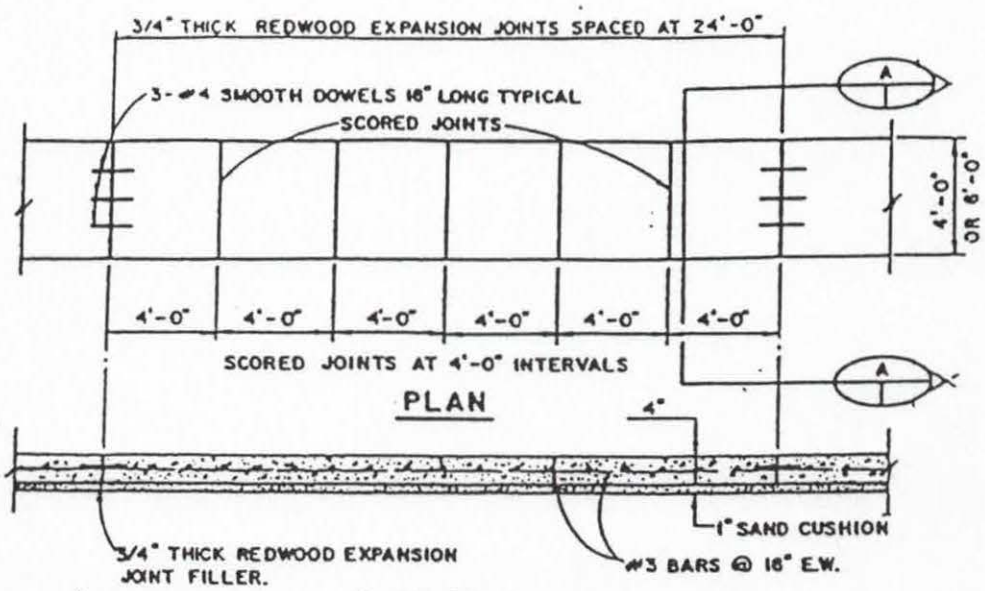

ELEVATION

TYPICAL DETAIL SIDEWALKS

N.T.S.

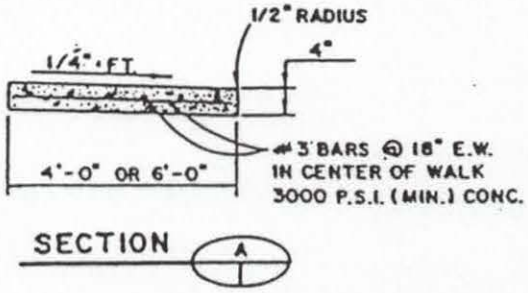

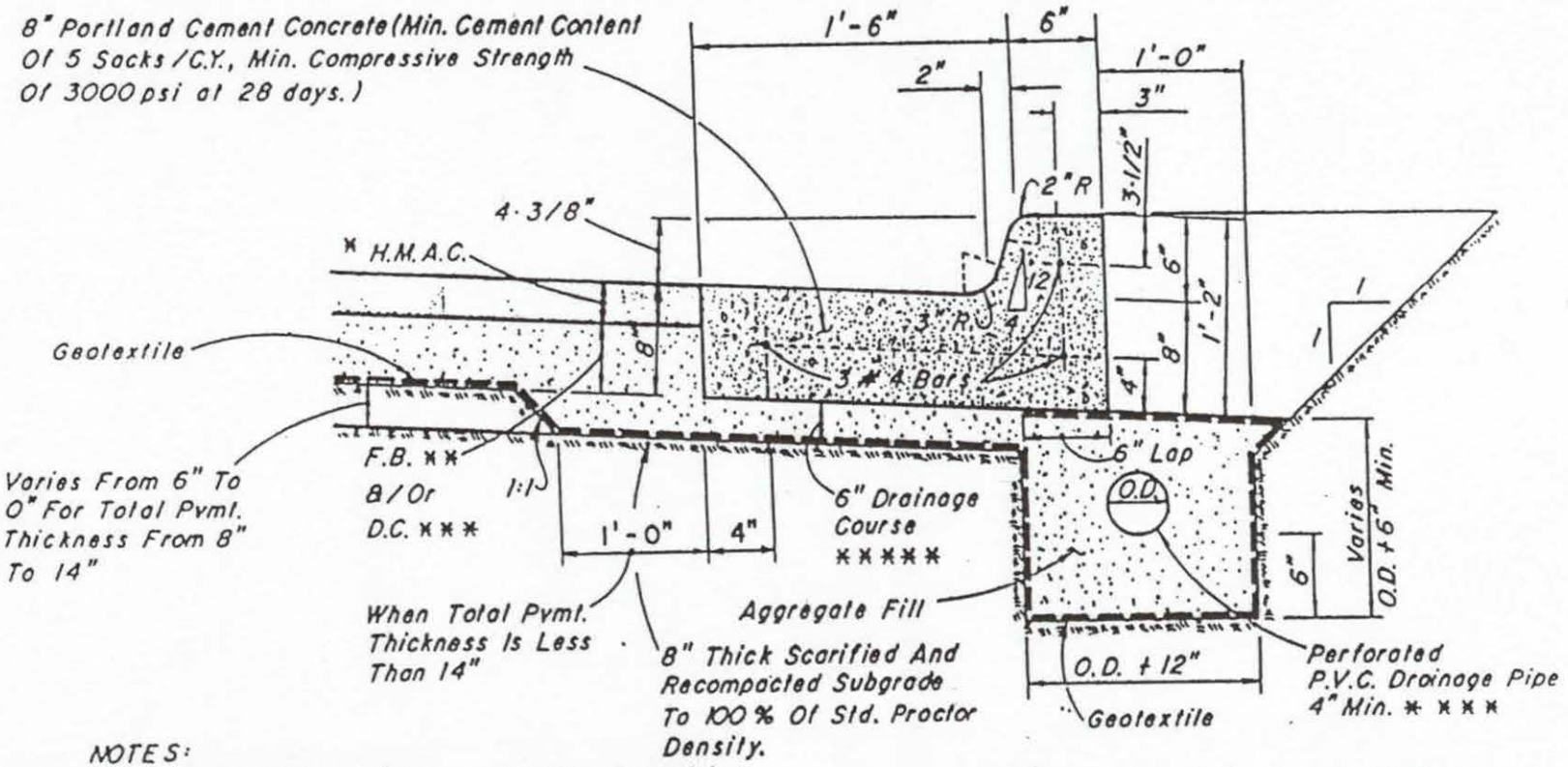

NOTES:

* 1. Dimension "H.M.A.C." Equals Hot Mix Asphaltic Concrete Thickness As Designed In Accordance With Article I, Section 1.3

** 2. Dimension "F.B." Equals Flexible Base Thickness As Designed In Accordance With Article I, Section 1.3

*** 3. Dimension "D.C." Equals Drainage Course Thickness As Designed In Accordance With Article I, Section 1.3

**** 4. Roadway Underdrain System Shall Be Designed In Accordance With Article I, Section 1.3

***** 5. 6" Minimum Thickness. Equals Total Pvmt. Design Thickness Minus 8" For Total Pvmt. Thickness Greater Than 14"

TYPICAL SECTION-STANDARD 24" CONCRETE CURB AND GUTTER

Not To Scale

PLATE D-12

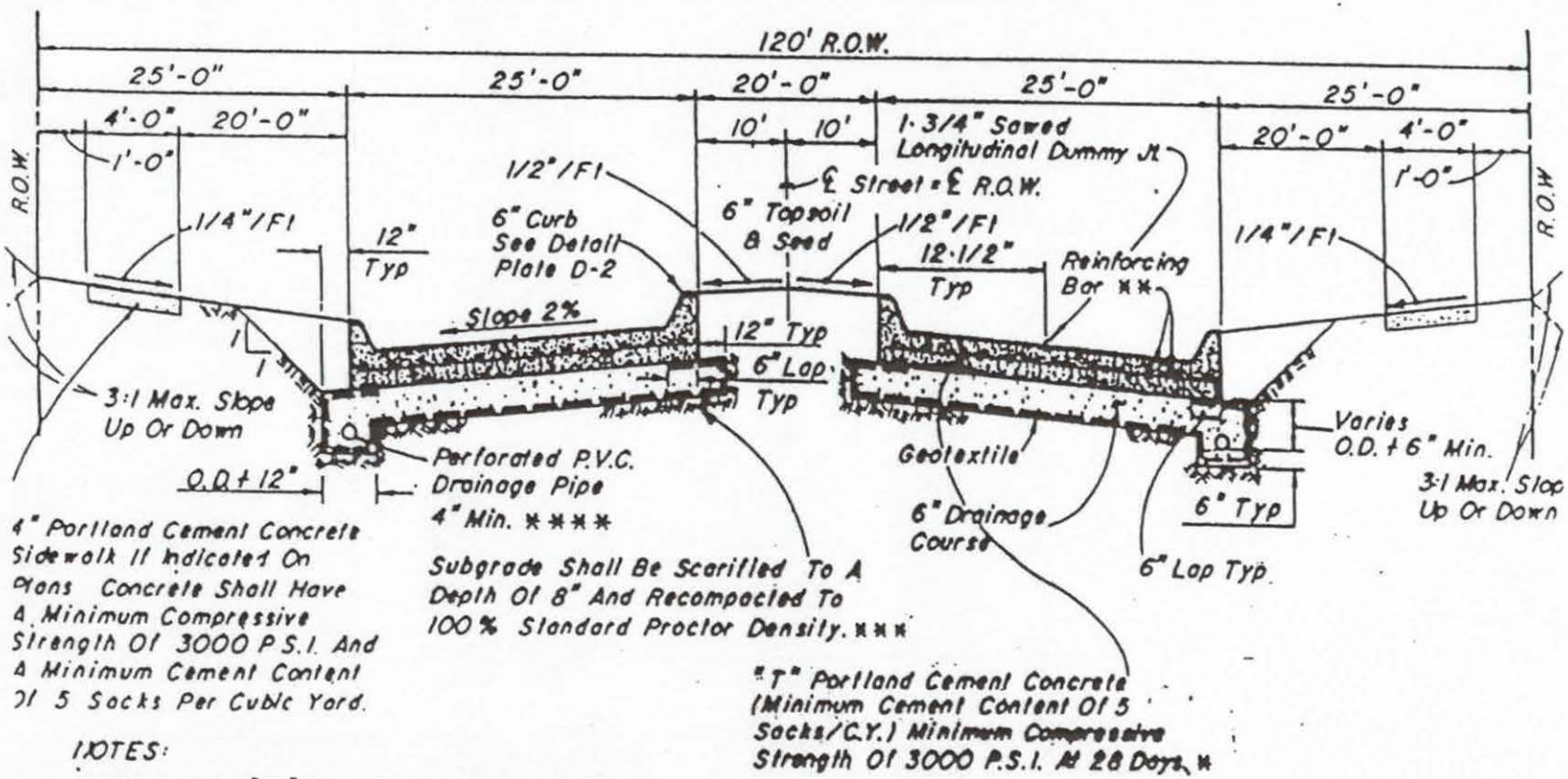

4" Portland Cement Concrete Sidewalk If Indicated On Plans Concrete Shall Have A Minimum Compressive Strength Of 3000 P.S.I. And A Minimum Cement Content Of 5 Sacks Per Cubic Yard.

Subgrade Shall Be Scarified To A Depth Of 8" And Recompacted To 100% Standard Proctor Density. ***

"T" Portland Cement Concrete (Minimum Cement Content Of 5 Sacks/C.Y.) Minimum Compressive Strength Of 3000 P.S.I. At 28 Days. *

NOTES:

* 1. Dimension "T" Equals Pavement Thickness As Designed In Accordance With Article I, Section 1.2

** 2. Reinforcing Bar Size And Spacing Shall Be Designed In Accordance With Article I, Section 1.2

*** 3. % Lime Or Cement For Stabilized Subgrade Shall Be Designed In Accordance With Article I, Section 1.2

**** 4. Roadway Underdrain System Shall Be Designed In Accordance With Article I, Section 1.3

5. Flexible Pvmt. Section May Be Used When Designed In Accordance With Article I, Section 1.3

PRIMARY THROUGHFARE
PORTLAND CEMENT CONCRETE
TYPICAL SECTION

Not to Scale

PLATE D-13

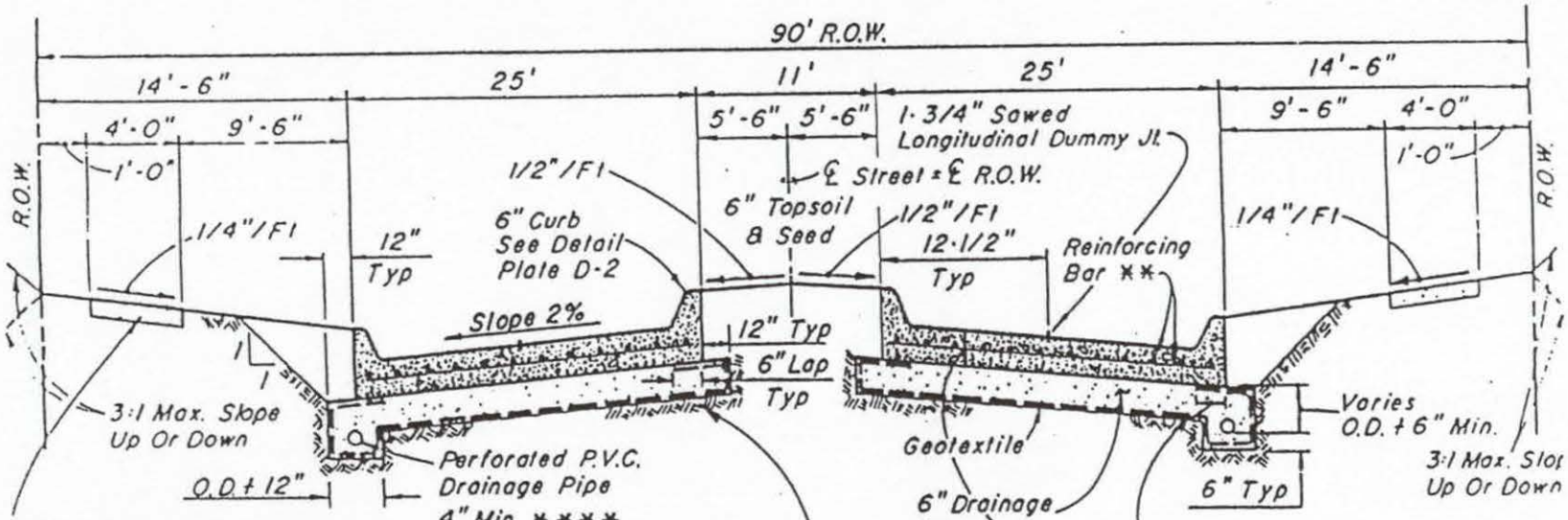

4" Portland Cement Concrete Sidewalk If Indicated On Plans Concrete Shall Have A Minimum Compressive Strength Of 3000 P.S.I And A Minimum Cement Content Of 5 Sacks Per Cubic Yard.

Subgrade Shall Be Scarified To A Depth Of 8" And Recompacted To 100% Standard Proctor Density. ***

"T" Portland Cement Concrete (Minimum Cement Content Of 5 Sacks/C.Y.) Minimum Compressive Strength Of 3000 P.S.I. At 28 Days. *

NOTES

* 1. Dimension "T" Equals Pavement Thickness As Designed In Accordance With Article I, Section 1.2

** 2. Reinforcing Bar Size And Spacing Shall Be Designed In Accordance With Article I, Section 1.2

*** 3. % Lime Or Cement For Stabilized Subgrade Shall Be Designed In Accordance With Article I, Section 1.2

**** 4. Roadway Underdrain System Shall Be Designed In Accordance With Article I, Section 1.3

5. Flexible Pvmt. Section May Be Used When Designed In Accordance With Article I, Section 1.3

SECONDARY THROUGHFARE
PORTLAND CEMENT CONCRETE
TYPICAL SECTION

Not to Scale

PLATE D-14

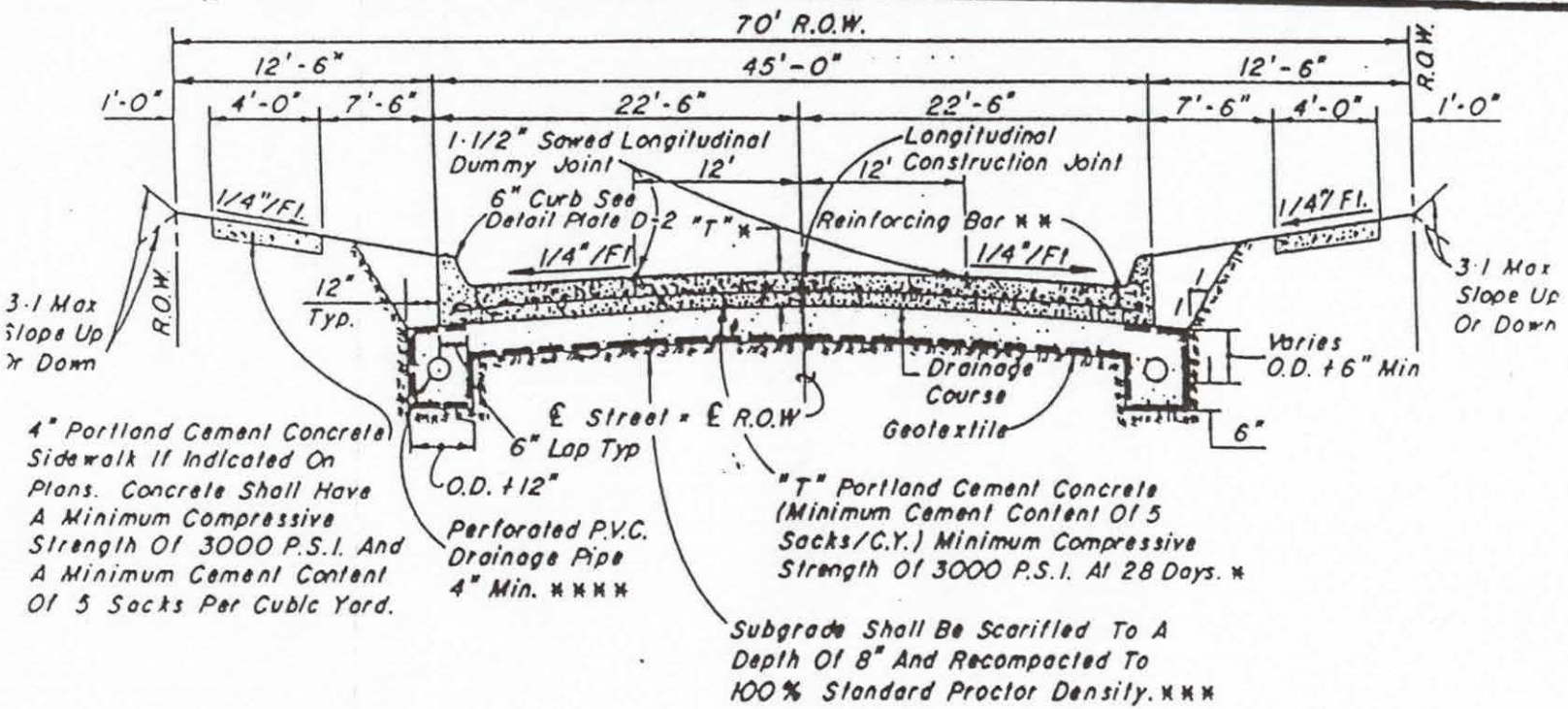

NOTES:

* 1. Dimension "T" Equals Pavement Th kness As Designed In Accordance With A. Icle I, Section 1.2

** 2. Reinforcing Bar Size And Spacing Shall Be Designed In Accordance With Article I, Section 1.2

*** 3. % Lime Or Cement For Stabilized Subgrade Shall Be Designed In Accordance With Article I, Section 1.2

**** 4. Roadway Underdrain System Shall Be Designed In Accordance With Article I, Section 1.3

COLLECTOR

PORTLAND CEMENT CONCRETE TYPICAL SECTION

Not to Scale

PLATE D-15

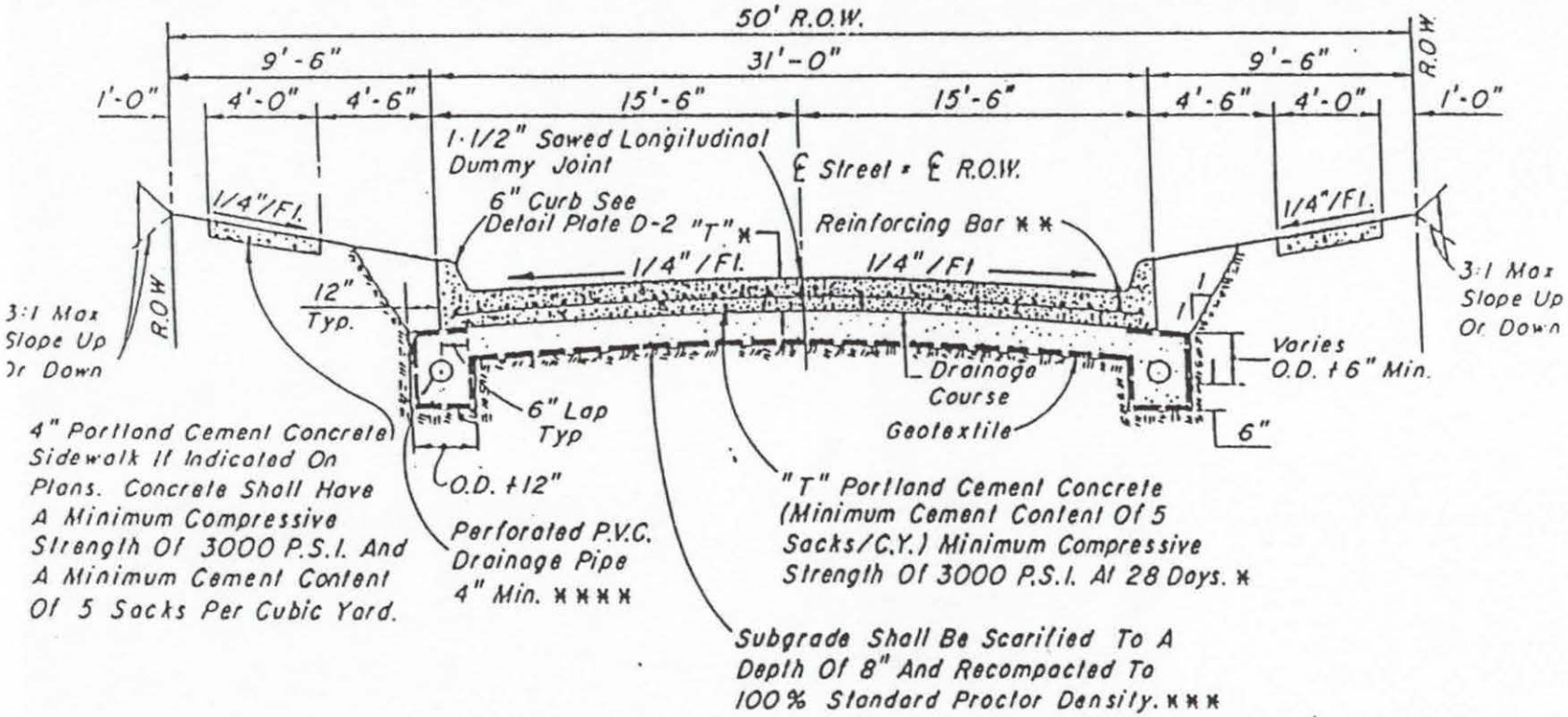

NOTES:

* 1. Dimension "T" Equals Pavement Thickness As Designed In Accordance With Article I, Section 1.2

** 2. Reinforcing Bar Size And Spacing Shall Be Designed In Accordance With Article I, Section 1.2

*** 3. % Lime Or Cement For Stabilized Subgrade Shall Be Designed In Accordance With Article I, Section 1.2

**** 4. Roadway Underdrain System Shall Be Designed In Accordance With Article I, Section 1.3

LOCAL

PORTLAND CEMENT CONCRETE TYPICAL SECTION

Not To Scale

PLATE D-16

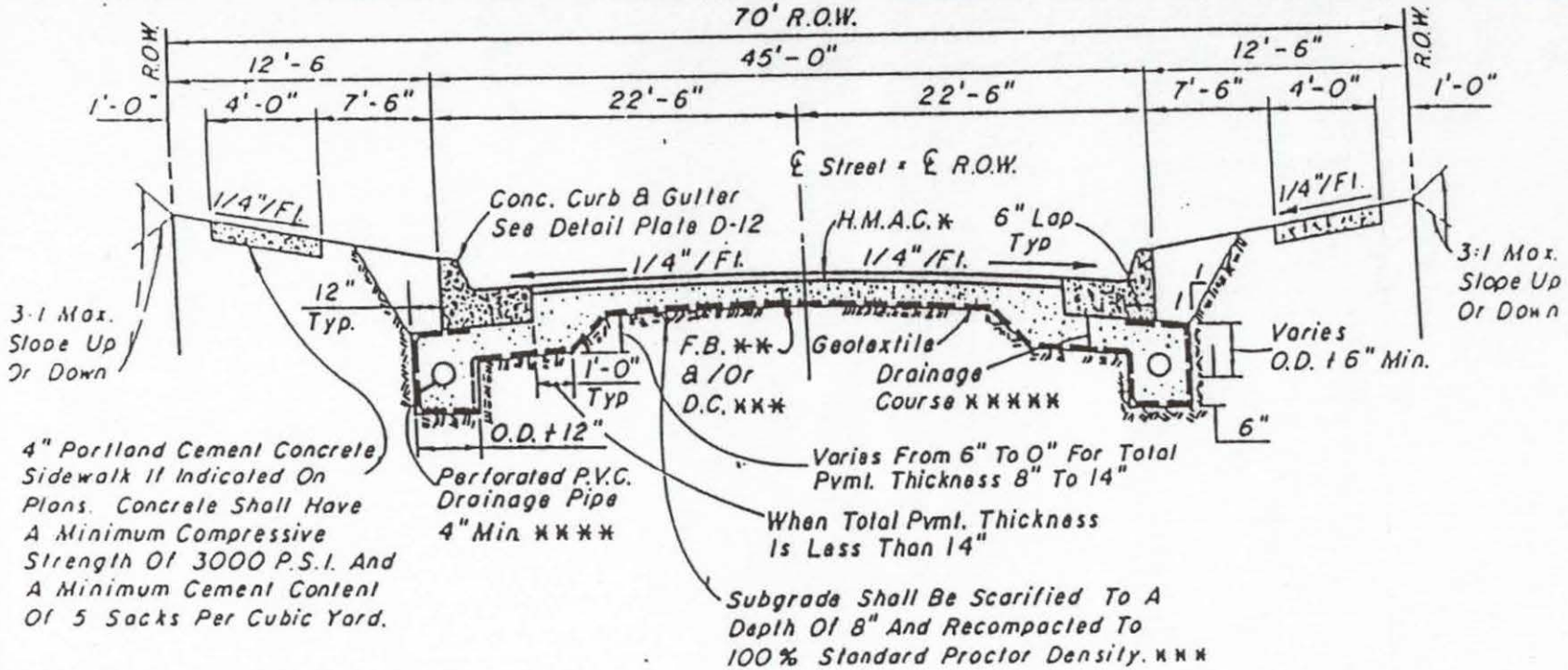

NOTES:

* 1. Dimension "H.M.A.C." Equals Hot Mix Asphaltic Concrete Thickness As Designed In Accordance With Article I, Section 1.3

** 2. Dimension "F.B." Equals Flexible Base Thickness As Designed In Accordance With Article I, Section 1.3

*** 3. Dimension "D.C." Equals Drainage Course Thickness As Designed In Accordance With Article I, Section 1.3

**** 4. Roadway Underdrain System Shall Be Designed In Accordance With Article I, Section 1.3

***** 5. 6" Minimum Thickness. Equals Total Pvmt. Design Thickness Minus 8" For Total Pvmt. Thickness Greater Than 14"

COLLECTOR

FLEXIBLE PAVEMENT TYPICAL SECTIONS

Not to Scale

PLATE D-17

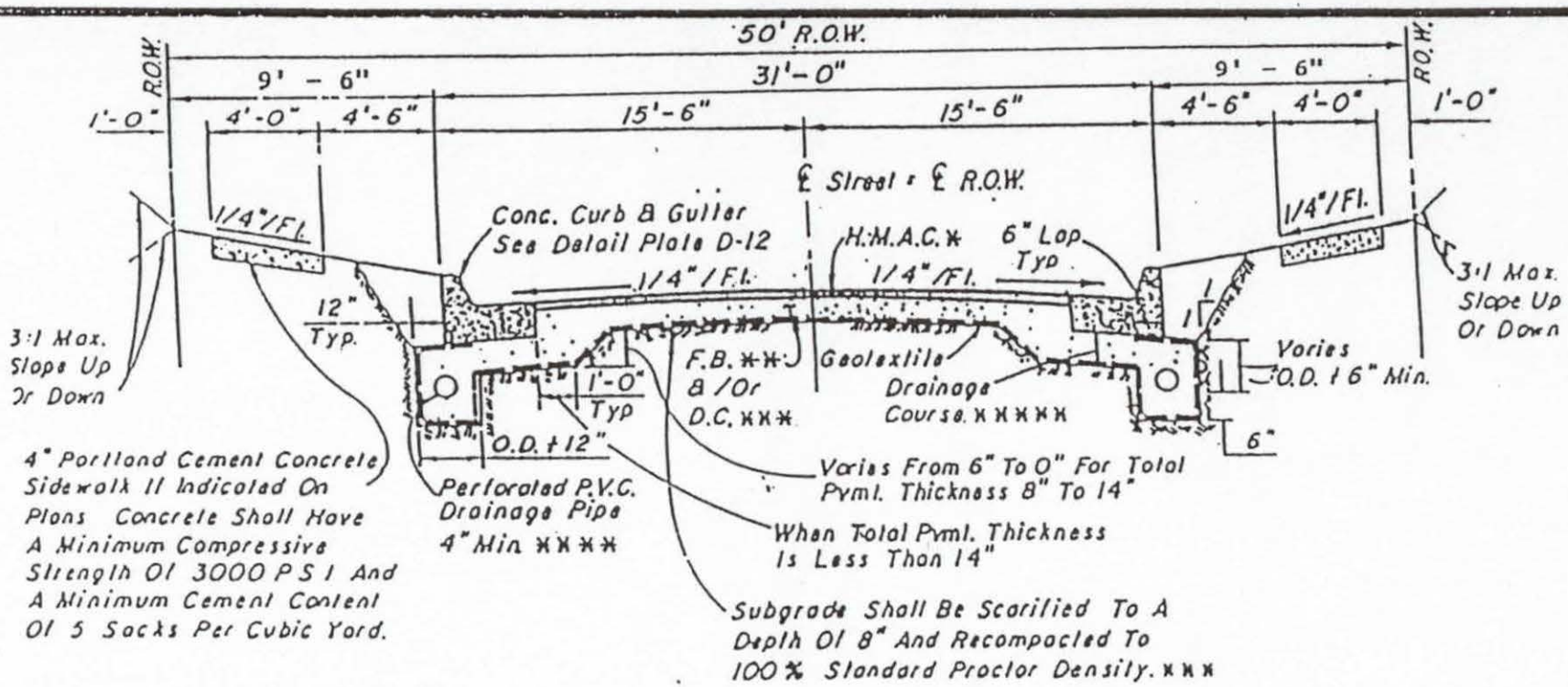

NOTES:

* 1. Dimension "H.M.A.C." Equals Hot Mix Asphaltic Concrete Thickness As Designed In Accordance With Article I, Section 1.3

** 2. Dimension "F.B." Equals Flexible Base Thickness As Designed In Accordance With Article I, Section 1.3

*** 3. Dimension "D.C." Equals Drainage Course Thickness As Designed In Accordance With Article I, Section 1.3

**** 4. Roadway Underdrain System Shall Be Designed In Accordance With Article I, Section 1.3

***** 5. 6" Minimum Thickness. Equals Total Pvmt. Design Thickness Minus 8" For Total Pvmt. Thickness Greater Than 14"

LOCAL

FLEXIBLE PAVEMENT TYPICAL SECTIONS

Not To Scale

PLATE D-18

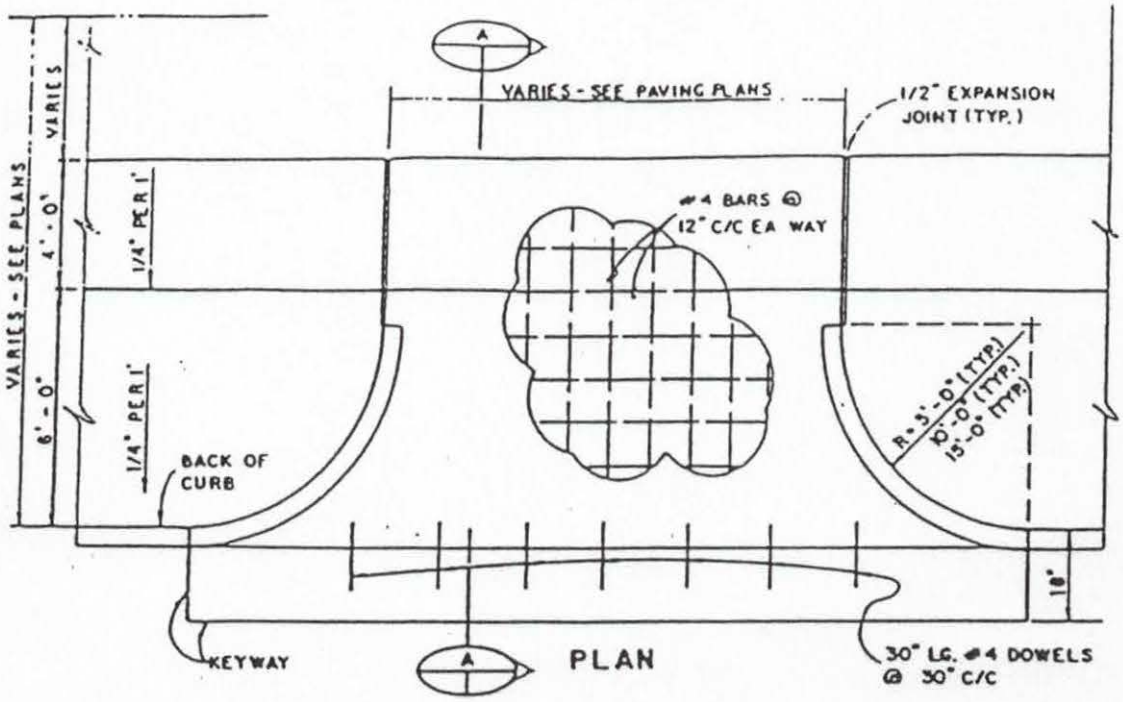

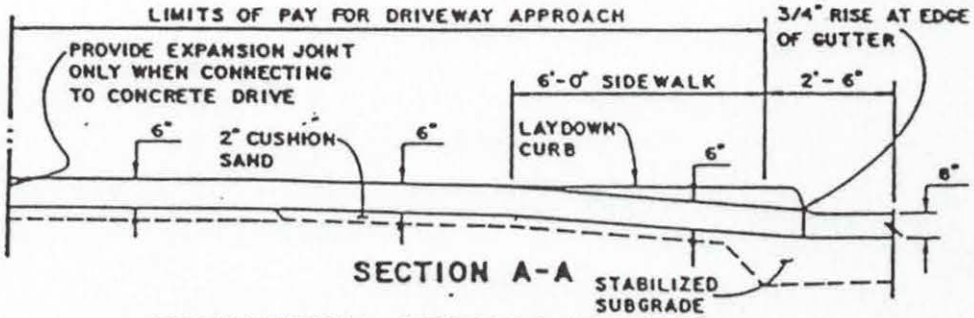

DRIVEWAY APPROACH AND LAYDOWN CURB DETAILS

N.T.S.

PLATE D-19

GENERAL STRUCTURAL NOTES

REINFORCED CONCRETE

1. ALL REINFORCED CONCRETE SHALL COMPLY WITH ACI 301 & ACI 318 EXCEPT WHERE OTHERWISE NOTED OR SPECIFIED.
2. ALL DETAILING, FABRICATION AND ERECTION OF REINFORCING BARS UNLESS OTHERWISE NOTED OR SPECIFIED, SHALL FOLLOW ACI "MANUAL OF STANDARD PRACTICE".
3. CLEAR CONCRETE COVER ON REINFORCING SHALL BE AS FOLLOWS:

FOOTINGS - BOTTOM REINFORCING	= 3"
FOOTINGS - TOP REINFORCING	= 2 1/2"
WALLS - REINFORCING	= 2 1/2"
SLABS ON GROUND-BOTTOM REINFORCING	= 3"
SLABS EXPOSED TO WEATHER - LARGER THAN	= 2"
SLABS EXPOSED TO WEATHER - #5 AND SMALLER	= 1 1/2"
SLABS NOT EXPOSED TO WEATHER	= 1"

4. ALL DOWEL & LAP LENGTH SHALL BE AS SHOWN ON TABLE UNLESS OTHERWISE NOTED.
5. ALL CONCRETE SHALL HAVE A MINIMUM 28 DAY COMPRESSIVE STRENGTH OF 3000 PSI.
6. REINFORCING BARS SHALL CONFORM TO ASTM DESIGNATION A615-GRADE 60 OR GRADE 40 AS SPECIFIED.
7. ADDITIONAL CONSTRUCTION JOINTS SHALL HAVE PRIOR APPROVAL OF ENGINEER.
8. PROVIDE 2-#5 BARS AROUND ALL OPENINGS IN STRUCTURAL SLABS AND WALLS IN WHICH EITHER SIDE IS GREATER THAN 12". UNLESS OTHERWISE SHOWN, SUCH BARS SHALL EXTEND AT LEAST 24" BEYOND CORNERS.
9. ALL EXPOSED CONCRETE CORNERS SHALL HAVE A 3/4" CHAMFER.

TENSION BAR-LAP & EMBEDMENT LENGTHS

	EMBEDMENT (IN.)		LAP LENTHS (IN.)			
	CLASS A		CLASS B		CLASS C	
BAR SIZE	TOP	OTHER	TOP	OTHER	TOP	OTHER
#3	12	12	12	12	14	12
#4	12	12	15	12	19	14
#5	14	12	18	13	24	17
#6	18	13	24	17	31	22
#7	25	18	32	23	42	30
#8	32	23	42	30	55	39
#9	41	29	53	38	70	50
#10	52	37	68	48	88	63
#11	64	46	83	59	109	78

WATER DISTRIBUTION SYSTEM

DETAILS	PLATE
TYPICAL THRUST BLOCKING DETAILS AND NOTES	W–1
HORIZONTAL BLOCKING TABLE	W–2
TYPICAL GATE VALVE AND BOX	W–3
EXTENSION STEM DETAIL	W–3
TYPICAL FIRE HYDRANT DETAIL	W–4
TYPICAL FIRE HYDRANT INSTALLATION	W–5
SINGLE SERVICE CONNECTIONS	W–6
DOUBLE SERVICE CONNECTIONS	W–7
MULTIMETER SERVICE CONNECTIONS	W–8

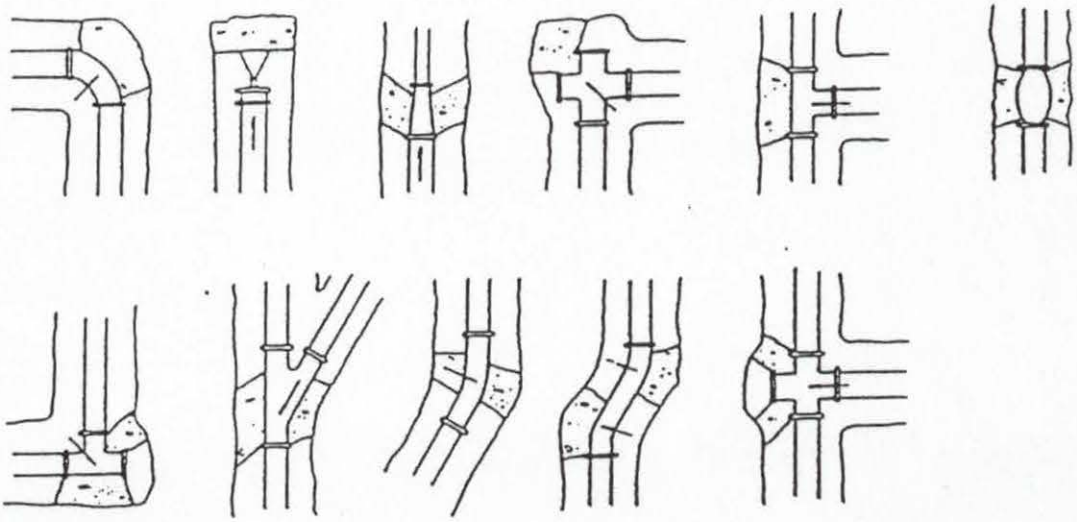

TYPICAL THRUST BLOCKING DETAILS

NOTES:

1. The Earth Bearing Surface Shall Be Undisturbed Material. Keep All Joints Free From Concrete. Thrust Block To Be Constructed Of 1,500 P.S.I. (28 Day) Concrete And Placed As Shown On "Typical Thrust Blocking Details" Above.

2. It Shall Be The Responsibility Of The Contractor To Install Adequate Thrust Blocking. The HORIZONTAL BLOCKING TABLE Shows The Minimum Thrust Blocking Area Required (In Square Feet) Bearing Against Undisturbed Trench Wall.

3. All Fittings Shall Be Blocked Regardless Of The Angle Or Direction, Except As Noted In The Chart

4. Allowable Soil Bearing Pressure Is Assumed To Be 215 Pounds Per Square Foot Per Foot Of Depth. Conditions May Vary Which Will Require Modifications To The Blocking Requirements.

HORIZONTAL BLOCKING TABLE

AREA REQUIRED (IN SQUARE FEET) BEARING AGAINST UNDISTURBED TRENCH WALL

PIPE SIZE (IN.)	THRUST (POUNDS) DEAD END AND TEE	BLOCKING (SQUARE FEET) *					
		DEAD END AND TEE	90° BEND	45° BEND	22-1/2° BEND	11-1/4° BEND	5° DEFLECT.
6	4241	6.6	9.3	5.0	2.6	1.3	1.0
8	7540	11.7	16.5	9.0	4.6	2.3	1.0
10	11,781	18.3	25.8	14.0	7.1	3.6	1.6
12	16,965	26.3	37.2	20.1	10.3	5.2	2.3

BASED ON 150 PSI WORKING PRESSURE WITH AN ALLOWABLE INCREASE OF 30% FOR SHORT TERM LOADS SUCH AS WATER HAMMER.

BASED ON AN ALLOWABLE SOIL BEARING PRESSURE OF 215 POUNDS PER SQUARE FOOT PER FOOT OF DEPTH

THIS TABLE IS BASED ON 3.5 FEET OF DEPTH TO THE TOP OF PIPE.

* ONE SQUARE FOOT MINIMUM.

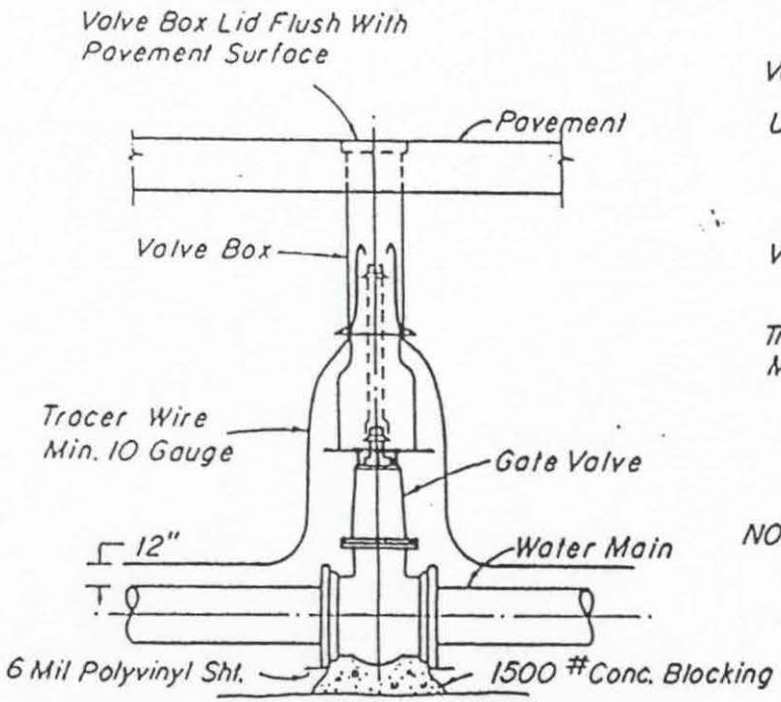

AT PAVED AREAS

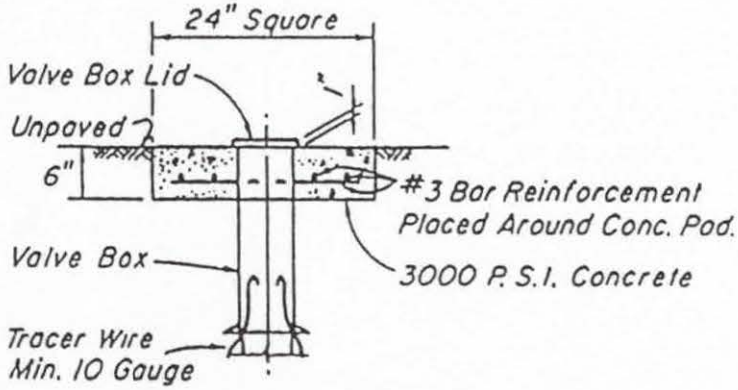

AT UNPAVED AREAS

NOTE: If Valve Operating Nut Is More Than 3' Below Pavement Surface, Provide Extension Stem To 1' Below Pavement Surface.

TYPICAL GATE VALVE AND BOX EXTENSION STEM DETAIL

Not To Scale

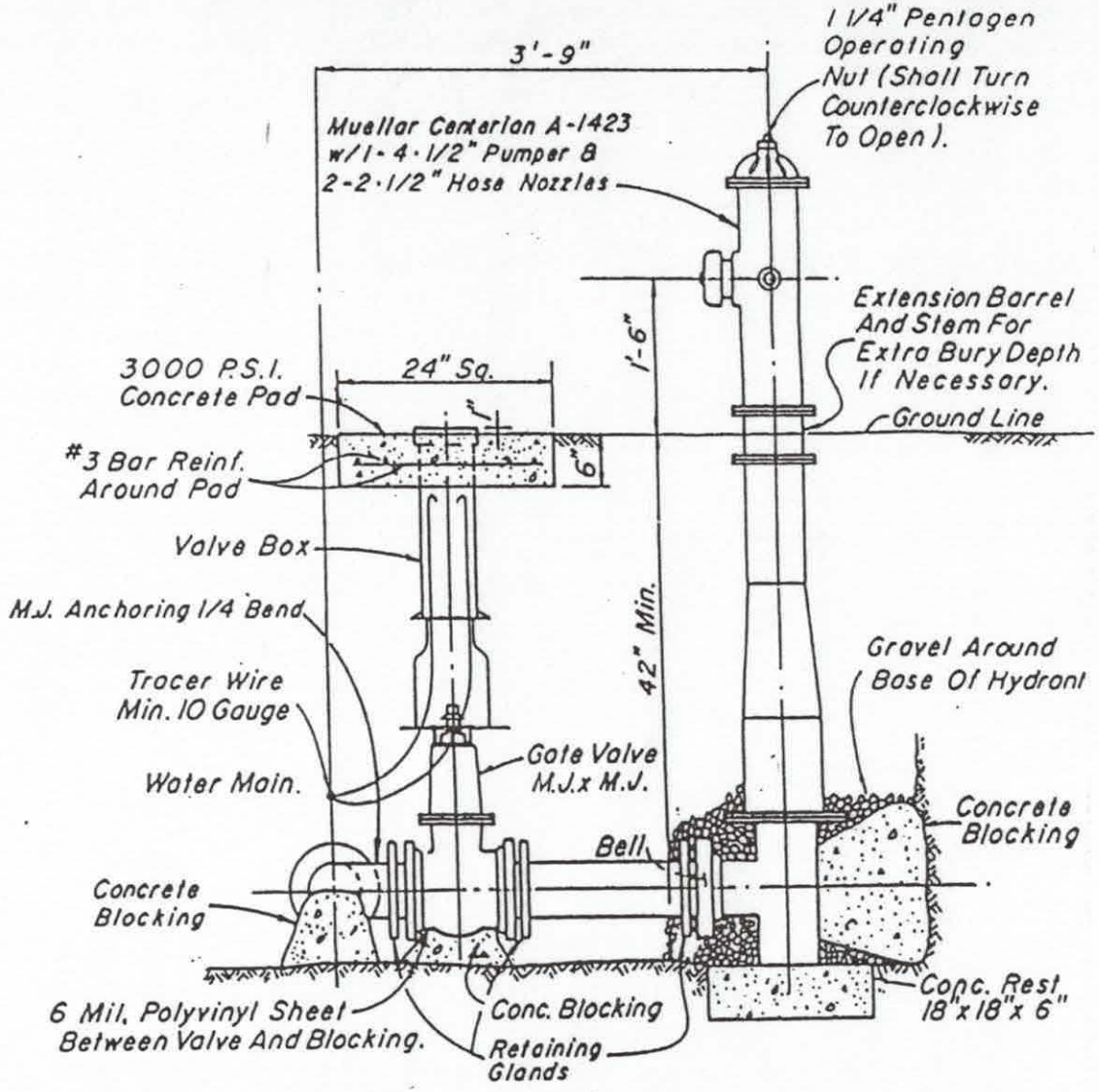

TYPICAL FIRE HYDRANT DETAIL

Not To Scale

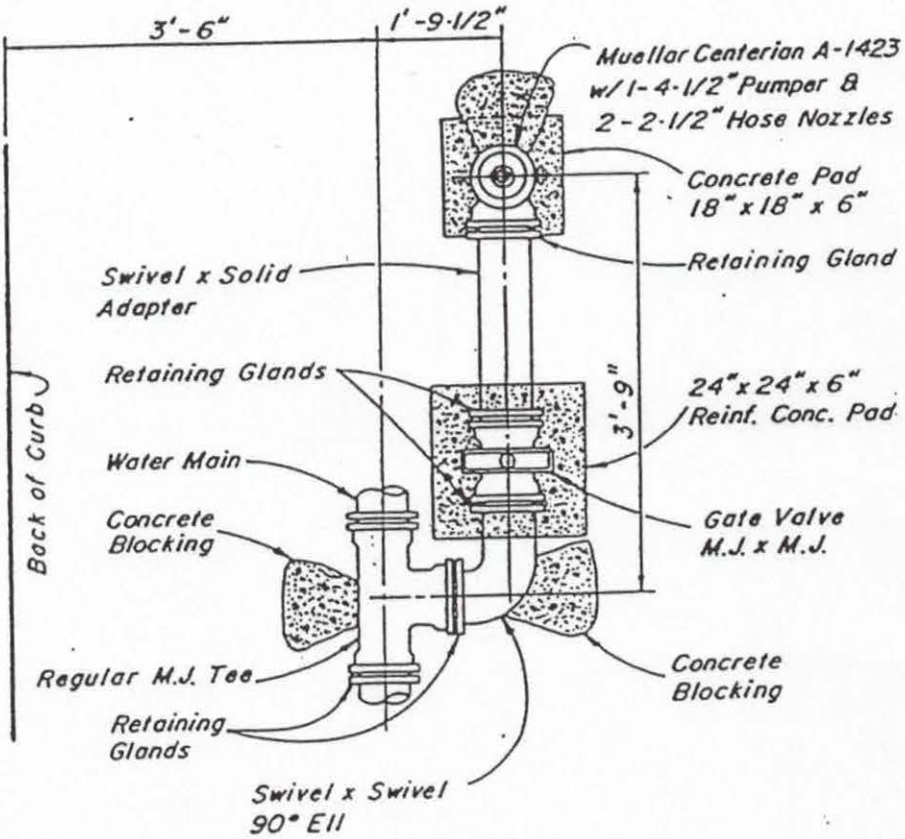

PLAN

TYPICAL FIRE HYDRANT INSTALLATION

Not To Scale

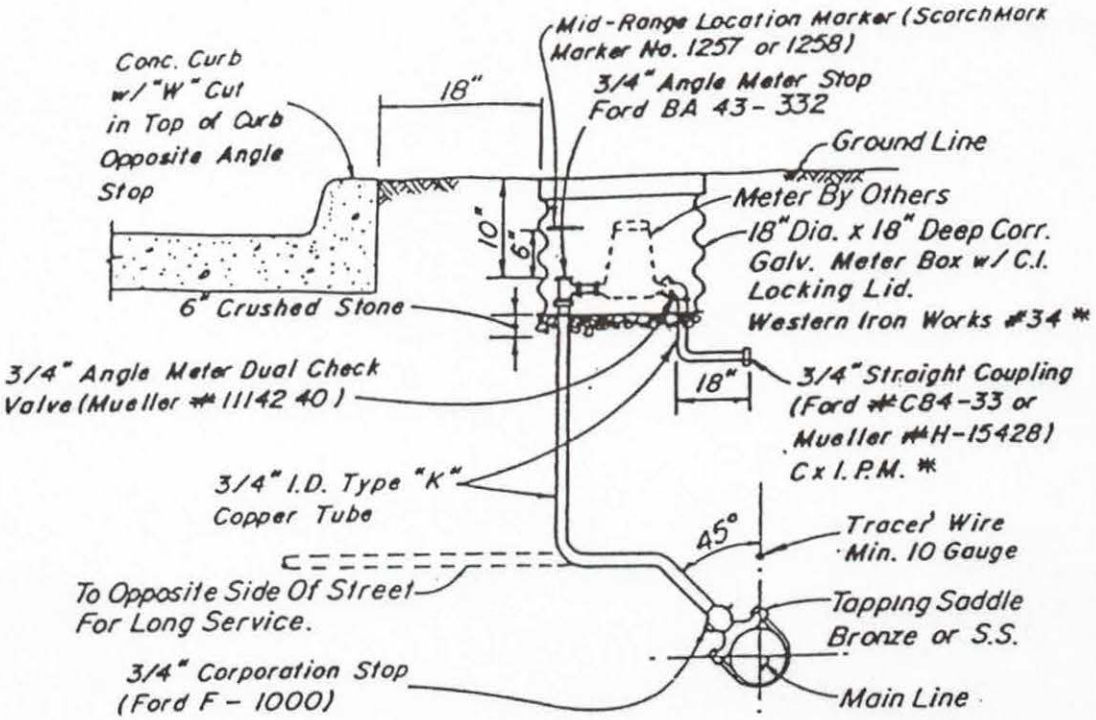

SECTION (A)

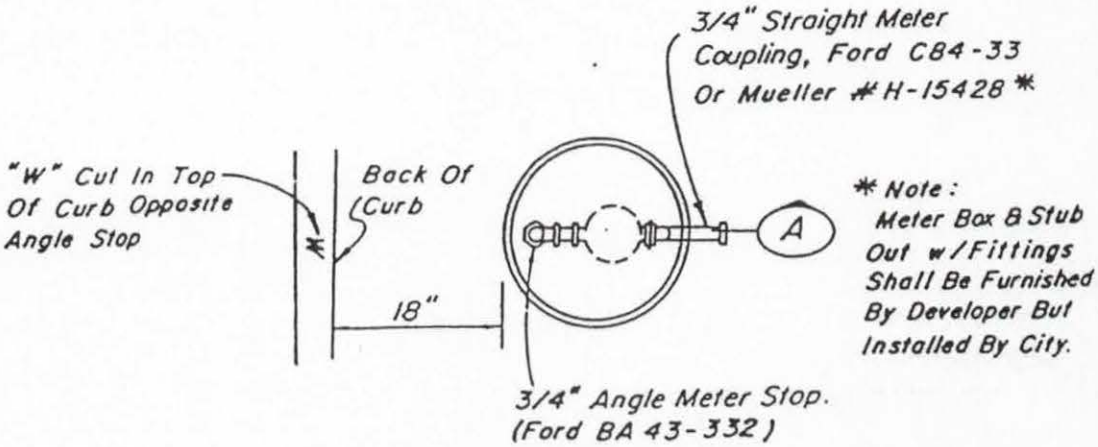

PLAN

SINGLE SERVICE CONNECTION

Not To Scale

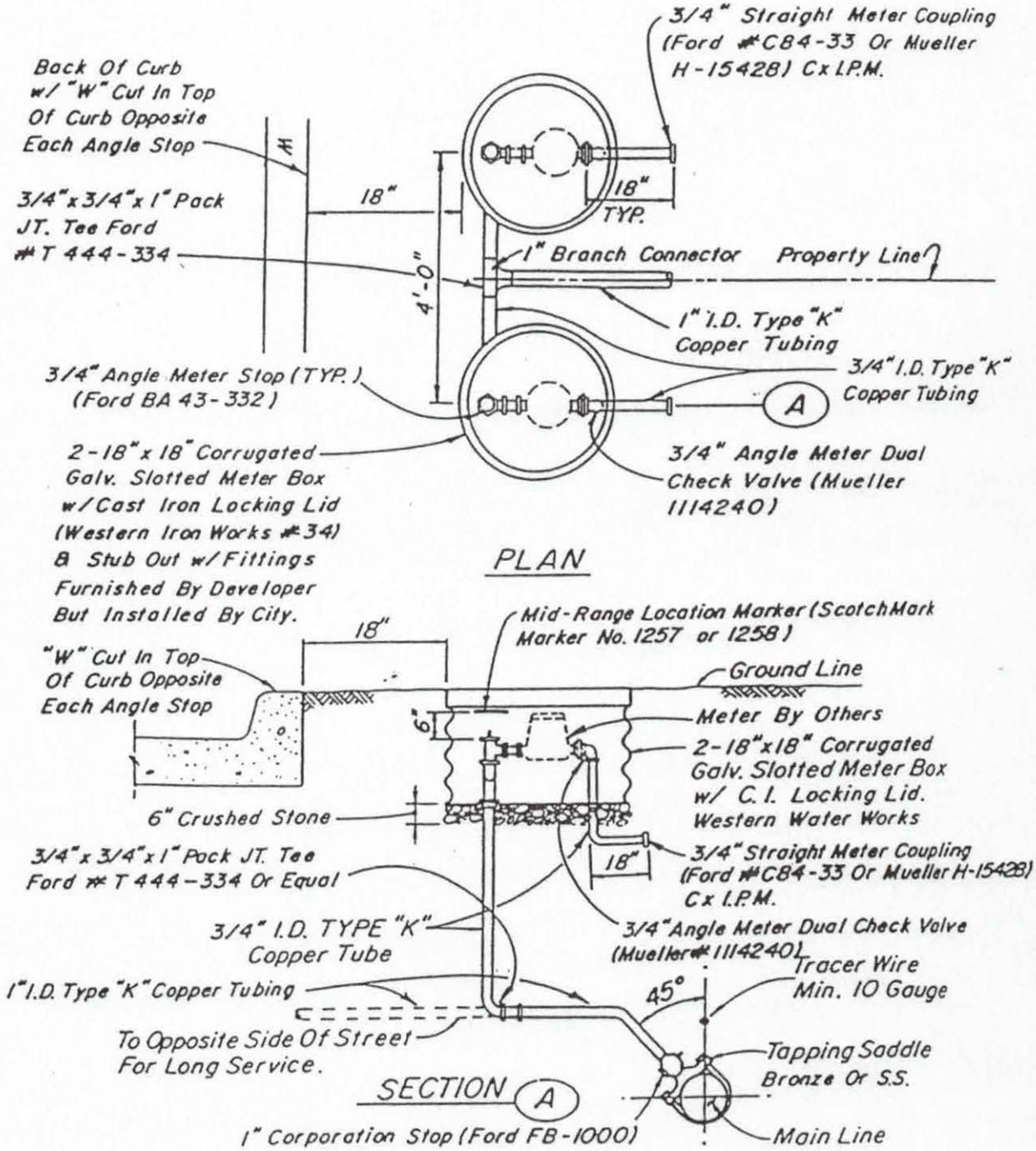

DOUBLE SERVICE CONNECTION

Not To Scale

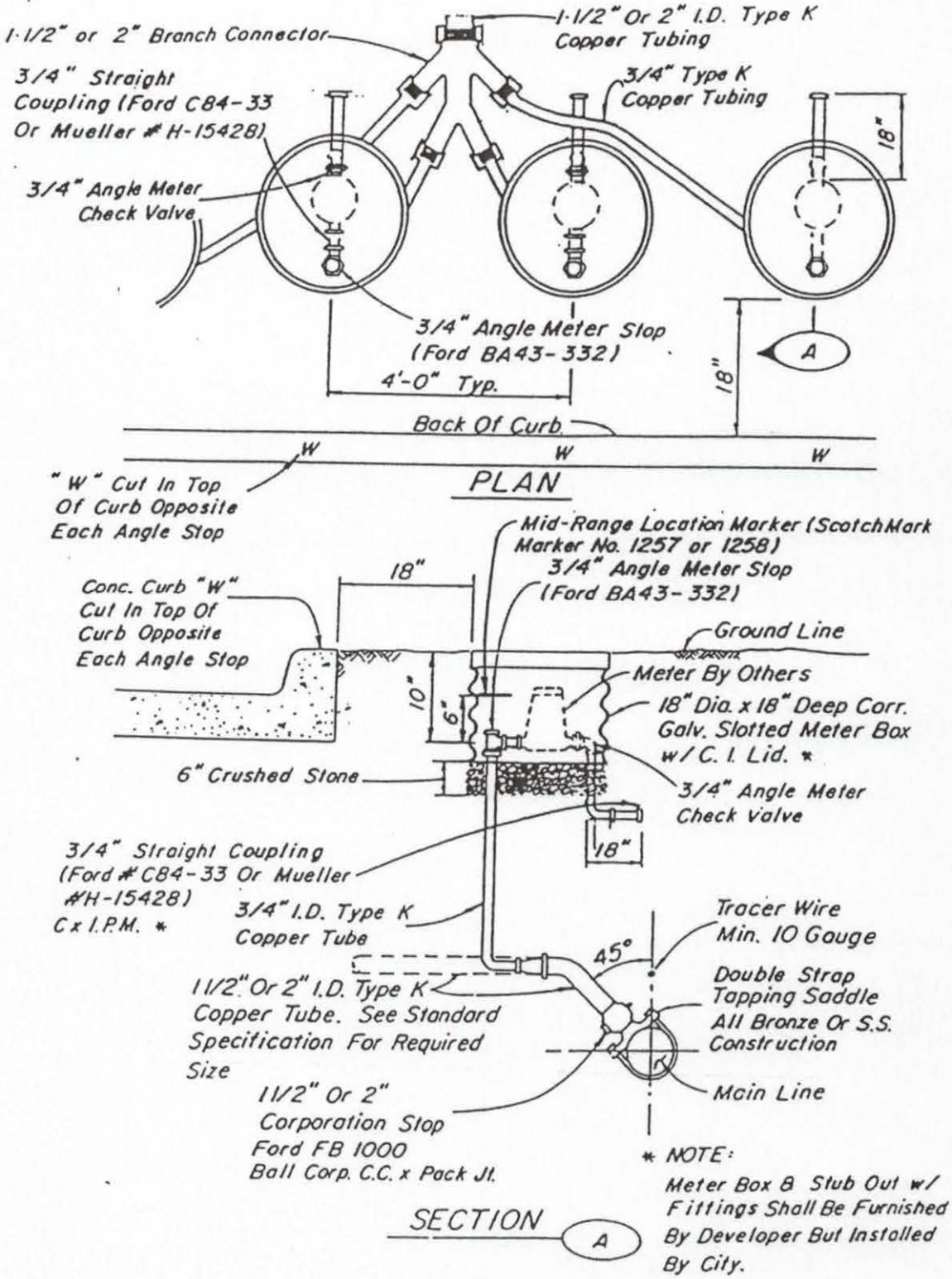

MULTIMETER SERVICE CONNECTION

Not To Scale

SANITARY SEWER SYSTEM

DETAILS	PLATE
STANDARD SERVICE CONNECTION	SS-1
DEEP SERVICE CONNECTION	SS-2
PREFABRICATED CONCRETE MANHOLES	SS-3
PRE-CAST CONCRETE MANHOLES	SS-4
DROP FOR MANHOLE	SS-5
P.V.C. TO DUCTILE IRON SEWER PIPE TRANSITION	SS-6
SEWER CLEANOUT	SS-7
SHALLOW CONCRETE MANHOLE	SS-8

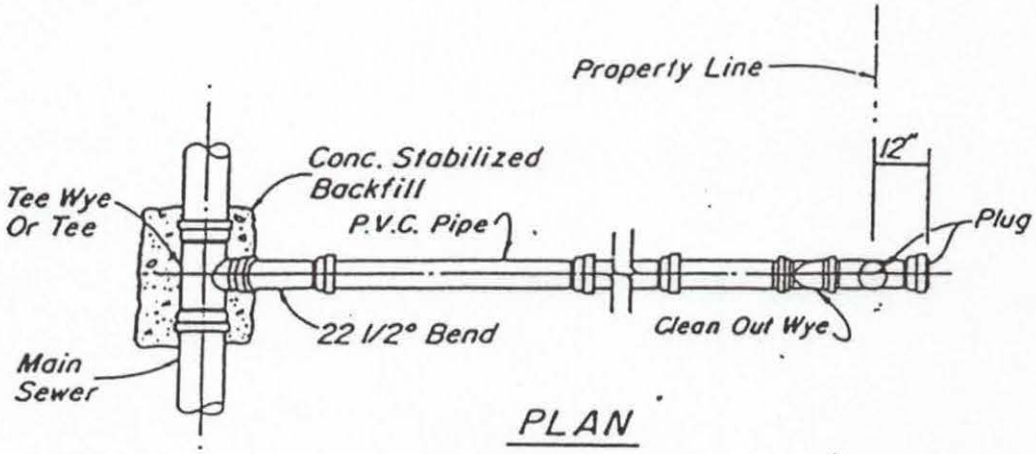

PLAN

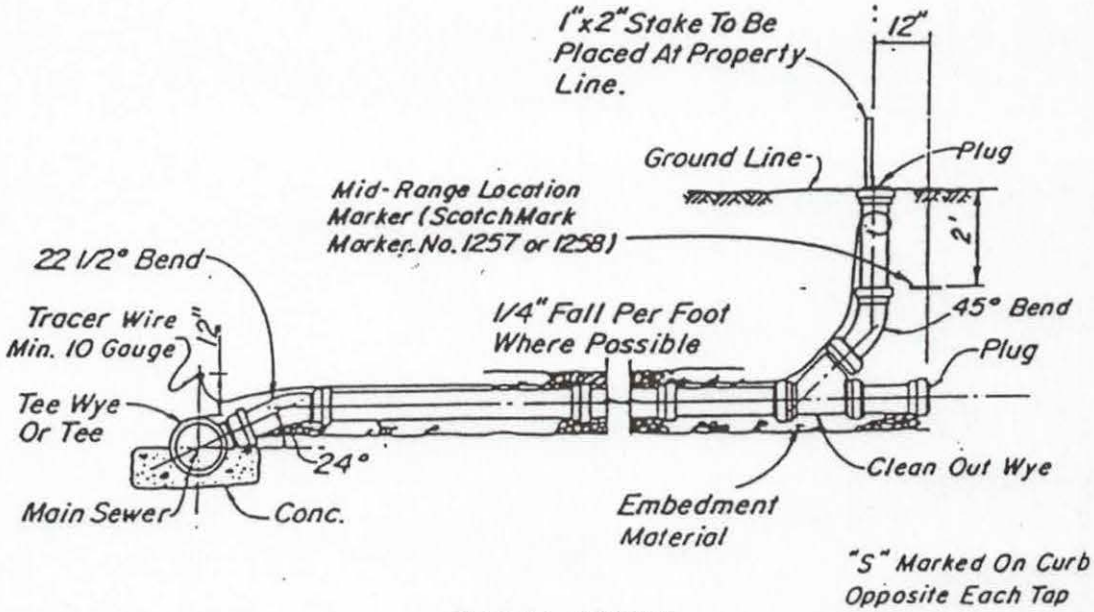

SIDE VIEW

STANDARD SERVICE CONNECTION

Not To Scale

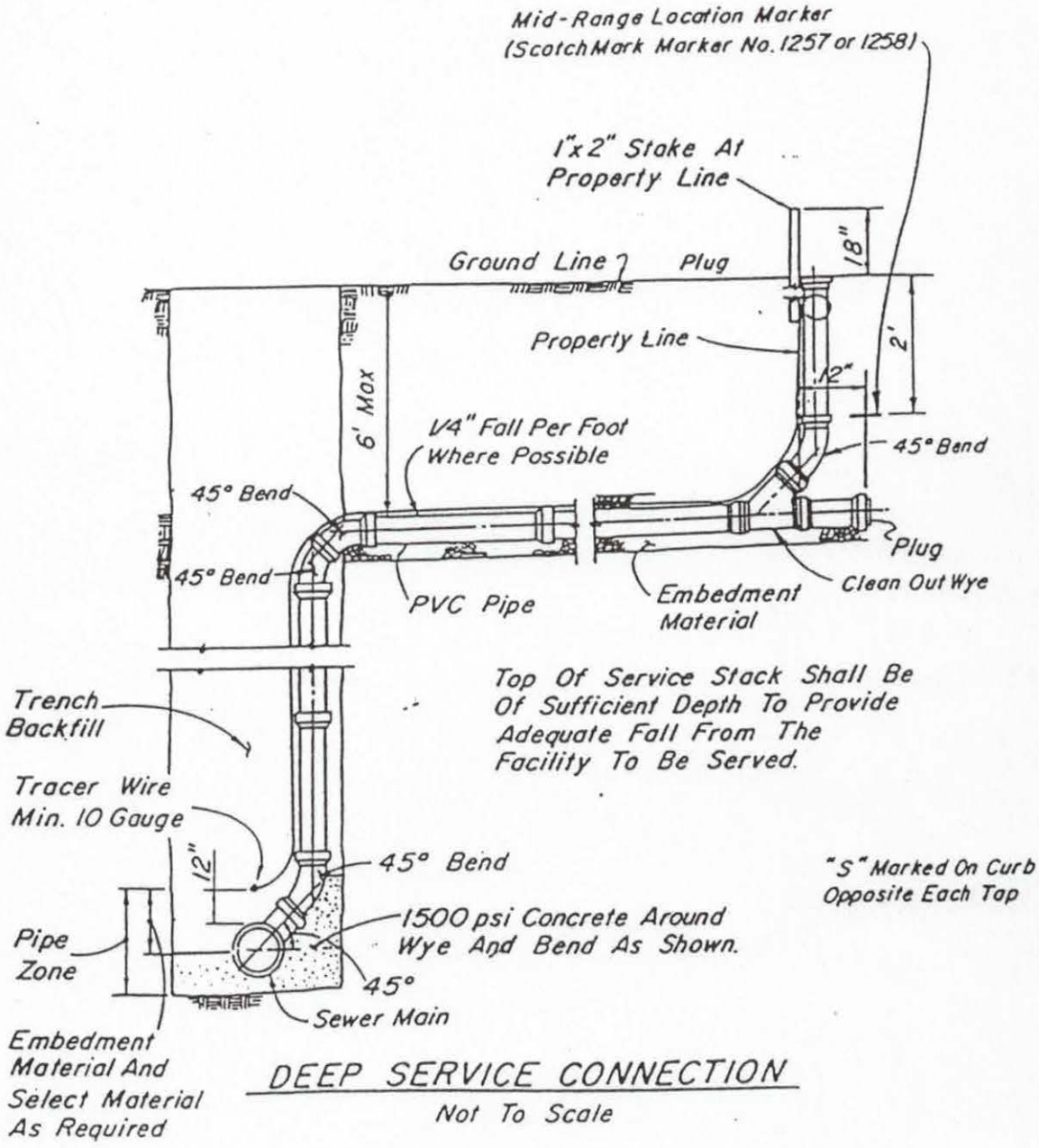

DEEP SERVICE CONNECTION

Not To Scale

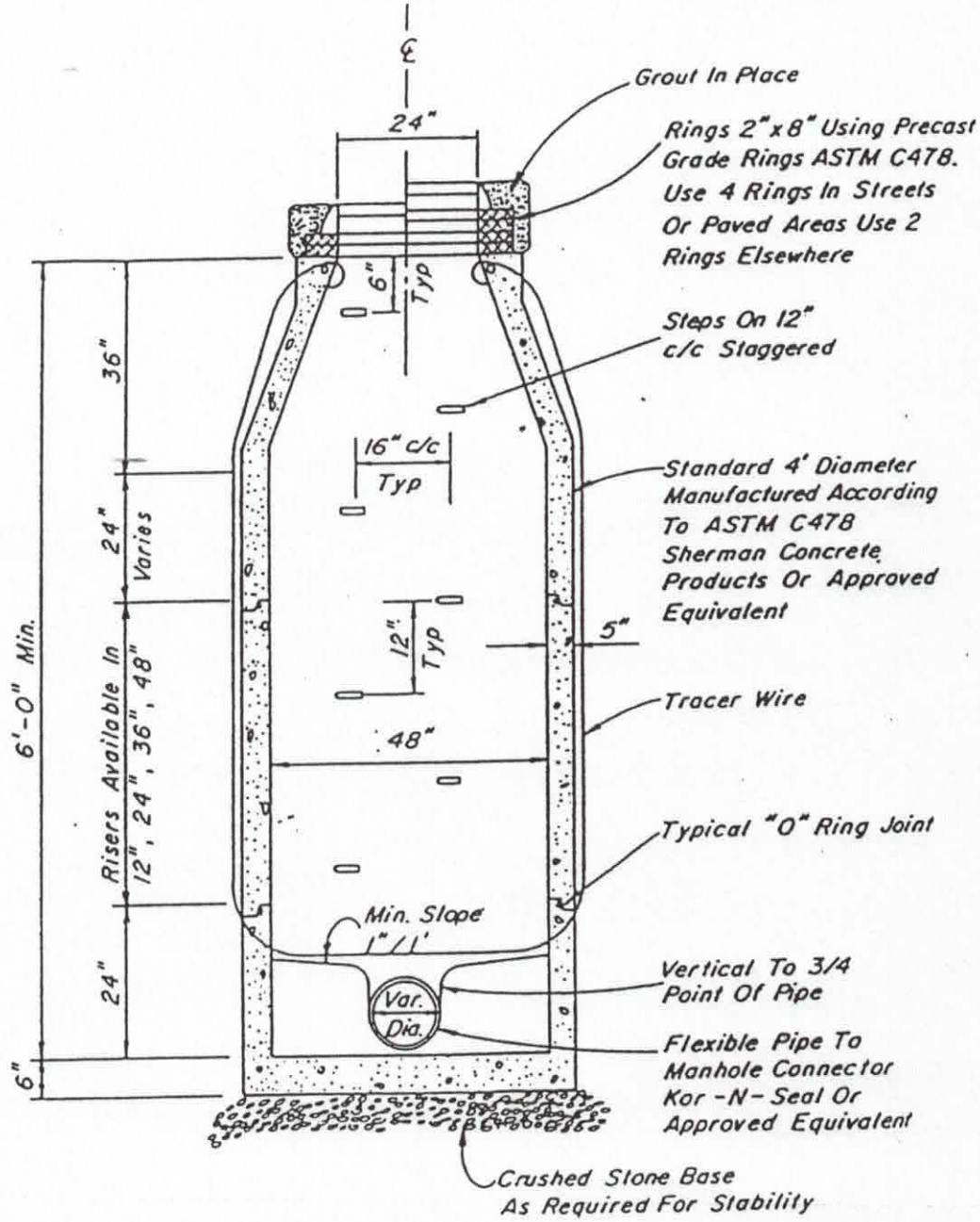

PRE-FABRICATED CONCRETE MANHOLE

Not To Scale

Note Cast-In-Place Manhole Shall Be Similiar In Shape And Dimensions As Shown Applicable Cast-In-Place Details Shall Be Approved By The City. Top Part Of Manhole May Be Eccentric When Approved By The City. Manhole Steps To Be Spaced Vertically At 16" C/C And Stagger Same. Concrete Above Base (Foundation) To Be 4000 PSI Class. See Specifications For More Details.

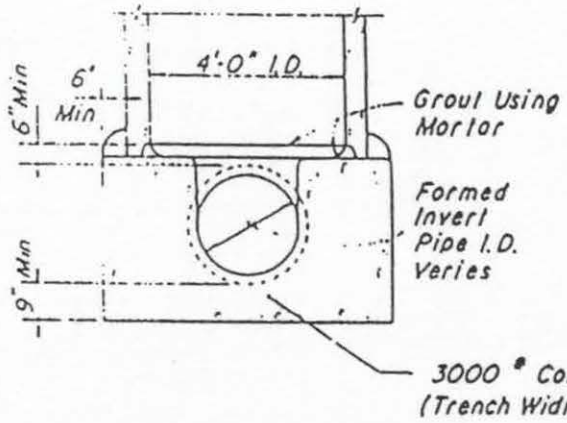

SECTION A-A

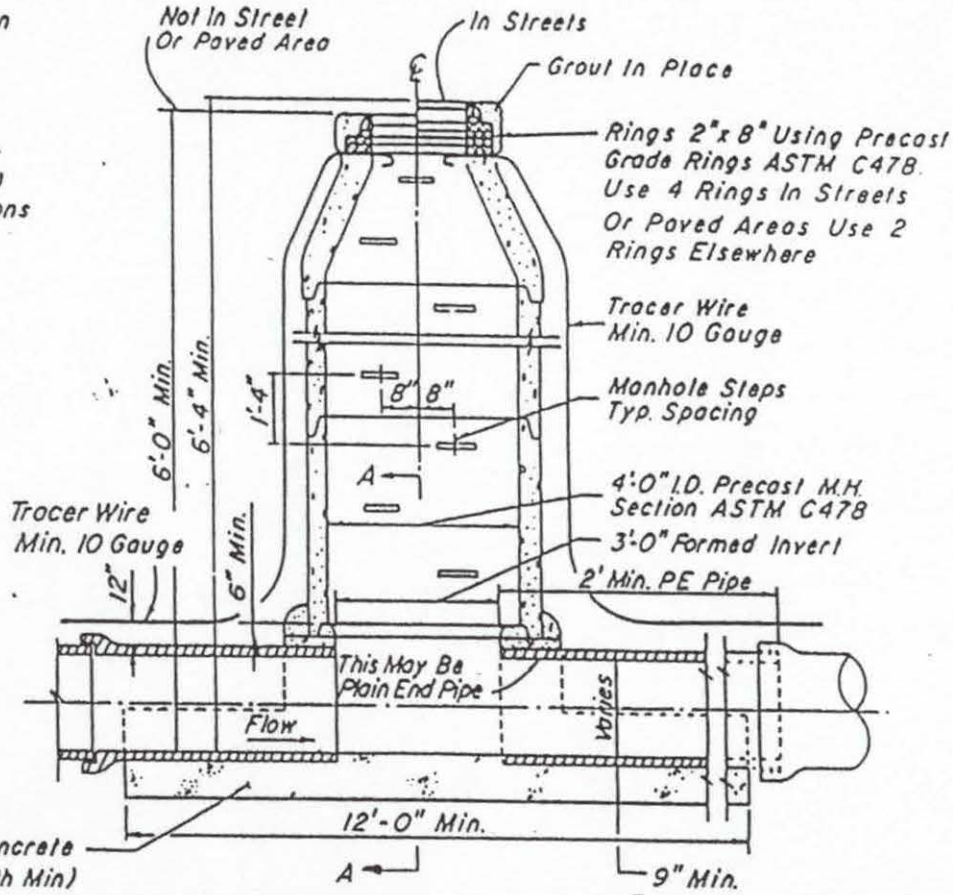

SECTION THRU PRE-CAST CONCRETE MANHOLE

TYPICAL DETAILS PRE-CAST CONCRETE MANHOLE

(Depths Not Less Than 6 Feet)
See Note For Cast-In-Place Manhole

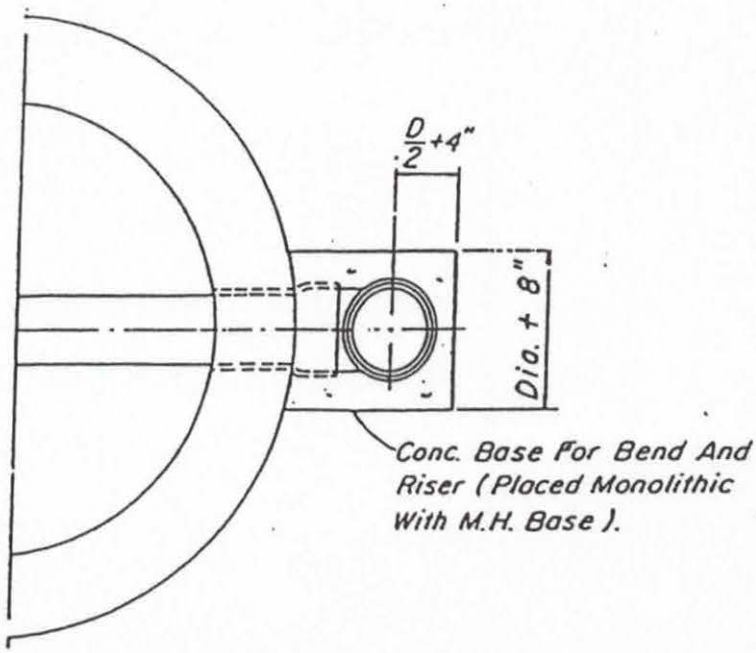

PLAN

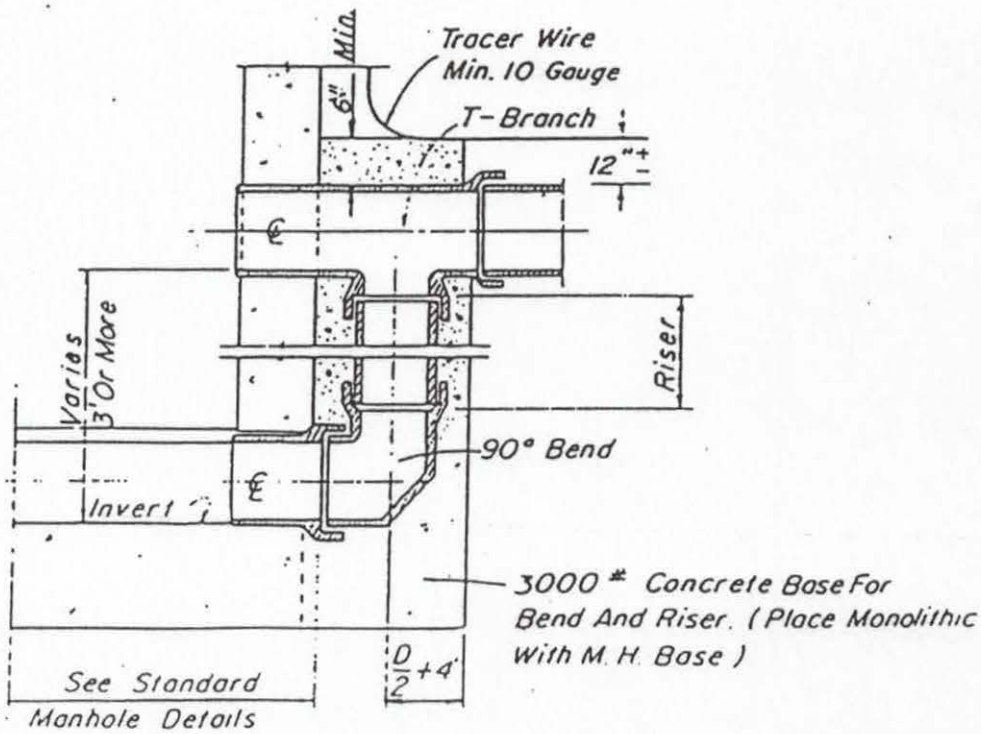

DETAIL OF DROP FOR MANHOLE

Not To Scale

SS - 5

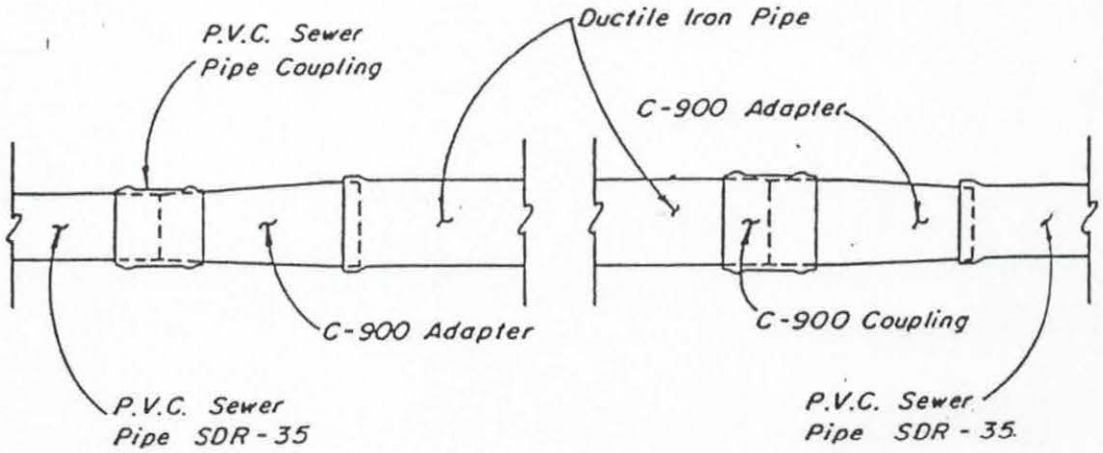

P.V.C. TO DUCTILE IRON SEWER PIPE TRANSITION

NOT TO SCALE

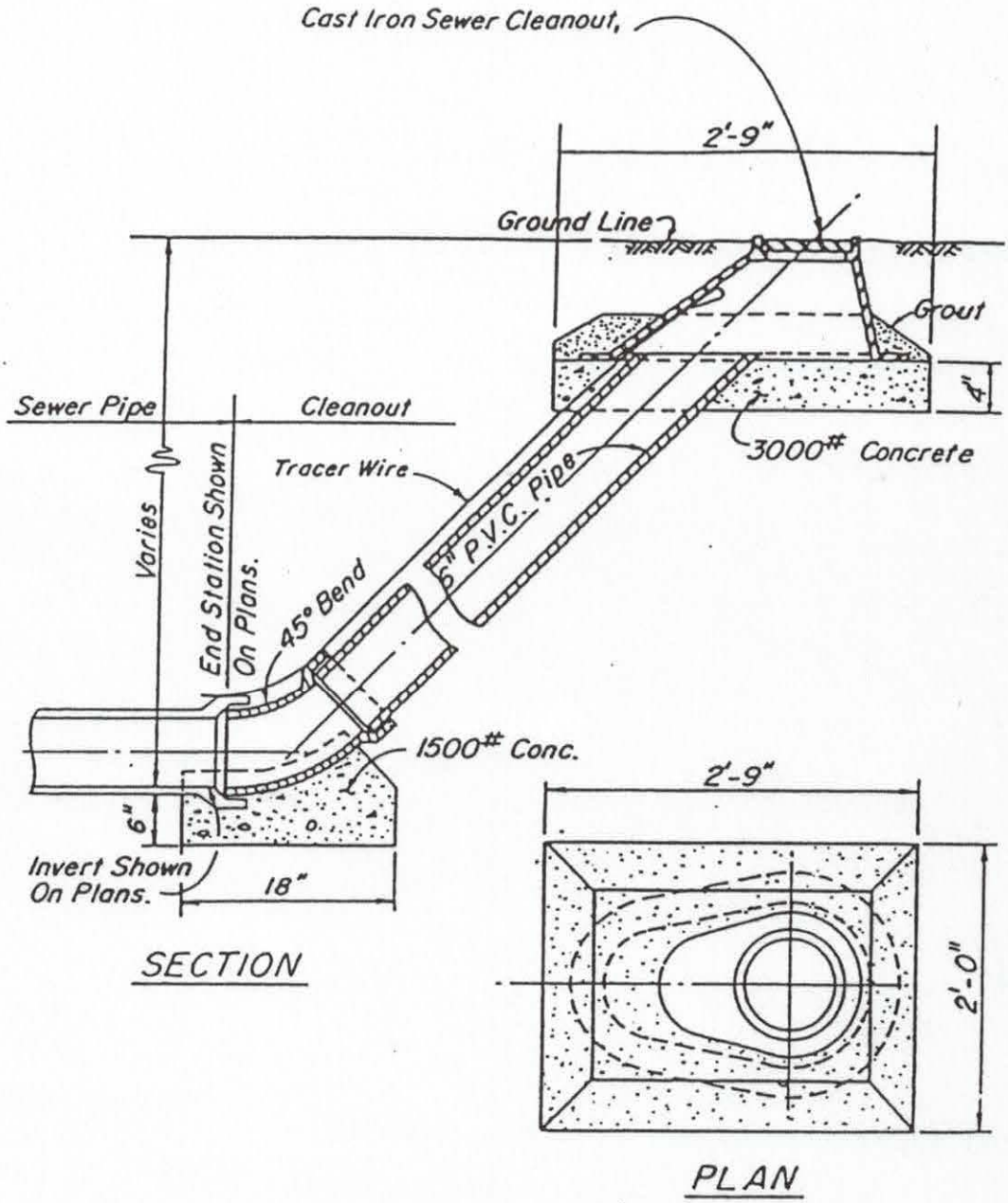

SEWER CLEANOUT

Not To Scale

SS – 7

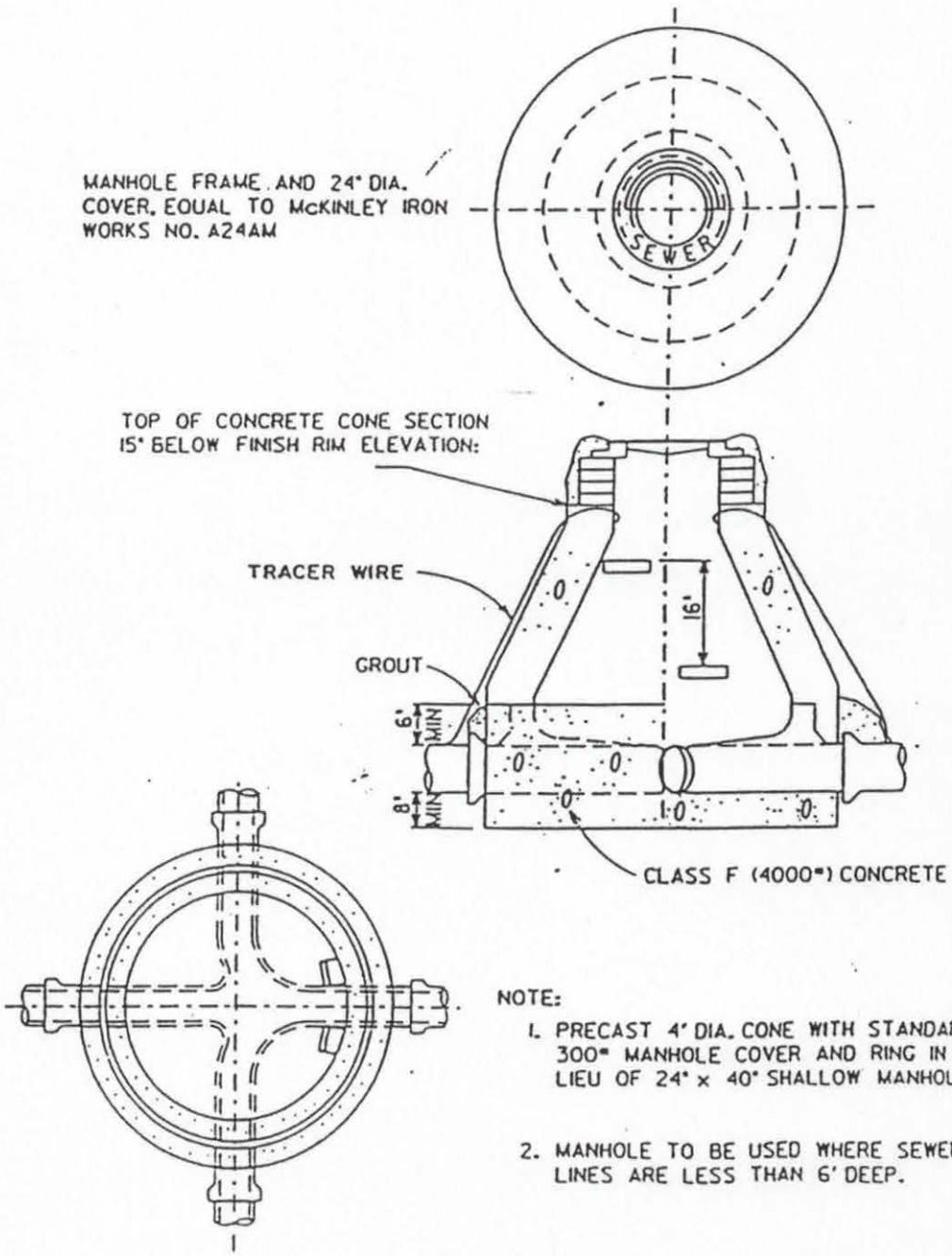

NOTE:

1. PRECAST 4' DIA. CONE WITH STANDARD 300# MANHOLE COVER AND RING IN LIEU OF 24" x 40" SHALLOW MANHOLE

2. MANHOLE TO BE USED WHERE SEWER LINES ARE LESS THAN 6' DEEP.

SHALLOW MANHOLE PRECAST CONE

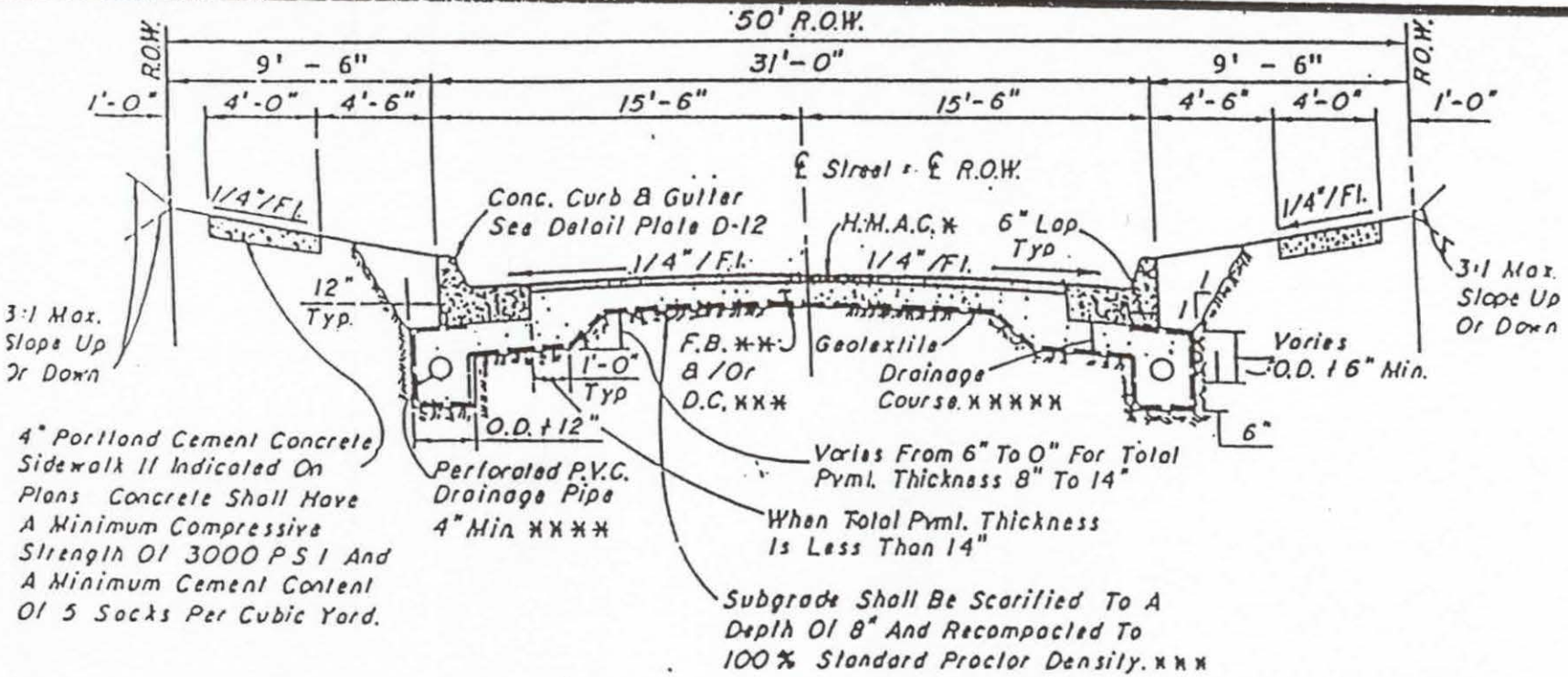

NOTES:

* 1. Dimension "H.M.A.C." Equals Hot Mix Asphaltic Concrete Thickness As Designed In Accordance With Article I, Section 1.3

** 2. Dimension "F.B." Equals Flexible Base Thickness As Designed In Accordance With Article I, Section 1.3

*** 3. Dimension "D.C." Equals Drainage Course Thickness As Designed In Accordance With Article I, Section 1.3

**** 4. Roadway Underdrain System Shall Be Designed In Accordance With Article I, Section 1.3

***** 5. 6" Minimum Thickness. Equals Total Pvmt. Design Thickness Minus 8" For Total Pvmt. Thickness Greater Than 14"

LOCAL
FLEXIBLE PAVEMENT TYPICAL SECTIONS

Not To Scale

PLATE D-18

PIPE TRENCH DETAILS

DETAILS	PLATE
GENERAL TRENCH NOTES	1
TRENCH BACKFILL DENSITY AND MOISTURE REQUIREMENTS	1
AGGREGATE FILL MATERIAL CLASSIFICATION	1
TRENCH TYPE A	2
TRENCH TYPE B	3
TRENCH TYPE C	4
TRENCH TYPE D	5
TRENCH TYPE E	6
TRENCH TYPE F	7
TRENCH TYPE G	8

GENERAL TRENCH NOTES

1. THIS DRAWING IS ISSUED TO SHOW PIPE BEDDING AND BACKFILL REQUIREMENTS AND NOT FOR THE PURPOSE OF SHOWING TRENCH EXCAVATION REQUIREMENTS RELATED TO TRENCH SAFETY SYSTEMS. TRENCH SAFETY SYSTEMS ARE REQUIRED FOR ALL TRENCHES GREATER THAN 5 FEET IN DEPTH AND UNDER SOME CONDITIONS MAY BE REQUIRED FOR TRENCHES LESS THAN 5 FEET IN DEPTH. SEE OTHER PORTIONS OF THE CONTRACT DOCUMENTS FOR TRENCH SAFETY SYSTEM REQUIREMENTS.
2. MAXIMUM TRENCH WIDTH OF B_c+24 INCHES MAY BE INCREASED AS REQUIRED TO PROVIDE ROOM FOR SHORING OR OTHER TRENCH SAFETY SYSTEMS, INCLUDING SLOPING OF TRENCH WALLS.
3. DEWATERING OF TRENCHES SHALL BE PERFORMED BY CONTRACTOR AS REQUIRED.
4. SEE SPECIFICATION SECTION 2.50. EARTH FILL CLASSIFICATIONS AND 2.1.20 AGGREGATE FILL CLASSIFICATIONS FOR DESCRIPTION OF TRENCH BACKFILL MATERIALS.

TRENCH BACKFILL DENSITY AND MOISTURE REQUIREMENTS

1. ALL EARTH FILL AND COHESIVE AGGREGATE FILL SHALL BE COMPACTED TO A MINIMUM OF 95% OF MAXIMUM DRY DENSITY AS DETERMINED BY ASTM D698, STANDARD PROCTOR.
2. EARTH FILL CLASS 1 AND 2 SHALL BE COMPACTED AT A MOISTURE CONTENT WITHIN MINUS 0% TO PLUS 4% OF THE OPTIMUM MOISTURE CONTENT. ALL OTHER CLASSES OF EARTH FILL AND COHESIVE AGGREGATE FILL SHALL BE COMPACTED AT A MOISTURE CONTENT WITHIN MIUS 2% TO PLUS 3% OF OPTIMUM MOISTURE CONTENT.
3. COHESIONLESS AGGREGATE FILL ON WHICH IT IS NOT PRACTICAL TO CONTROL THE DENSITY BY "PROCTOR" METHODS SHALL BE COMPACTED TO A MINIMUM OF 75% OF RELATIVE DENSITY AS DETERMINED BY ASTM D4253 AND D4254.
4. COHESIONLESS AGGREGATE FILL SHALL BE COMPACTED AT A MOISTURE CONTENT WITHIN A RANGE THAT WILL ACCOMMODATE PLACEMENT AND COMPACTION TO THE MINIMUM RELATIVE DENSITY SPECIFIED ABOVE.
5. EARTH FILL AND COHESIVE AGGREGATE FILL SHALL BE COMPACTED IN MAXIMUM 4 INCH LIFTS WITH PNEUMATIC ROLLERS OR POWER HAND TAMPERS AND SHALL RECEIVE A MINIMUM OF EIGHT PASSES.
6. COHESIONLESS AGGREGATE FILL SHALL BE COMPACTED IN MAXIMUM 4 INCH LIFTS WITH VIBRATORY ROLLERS OR VIBRATORY PLATE POWER HAND COMPACTORS AND SHALL RECEIVE A MINIMUM OF EIGHT PASSES.
7. THE OWNER SHALL ARRANGE AND PAY FOR DENSITY AND MOISTURE TESTING. THE TESTING FREQUENCY AND METHODS SHALL BE AS REQUESTED BY THE ENGINEER. THE ENGINEER MAY WAIVE TESTING REQUIREMENTS ON COHESIONLESS BEDDING WHERE TESTING IS NOT PRACTICAL BECAUSE OF LIMITED SPACE BETWEEN THE PIPE AND TRENCH WALLS; HOWEVER, THE MINIMUM NUMBER OF PASSES OF THE COMPACTION EQUIPMENT SPECIFIED ABOVE SHALL BE ACHIEVED.

AGGREGATE FILL MATERIAL		
	PIPE MATERIAL/TYPE	AGGREGATE FILL
1	REINFORCED CONCRETE	CLASS 2
2	CONCRETE CYLINDER	CLASS 2
3	PLAIN CONCRETE	CLASS 10
4	STEEL	CLASS 3
5	DUCTILE IRON/CAST IRON	CLASS 3
6	CORRUGATED METAL	CLASS 3
7	PLASTIC	CLASS 10

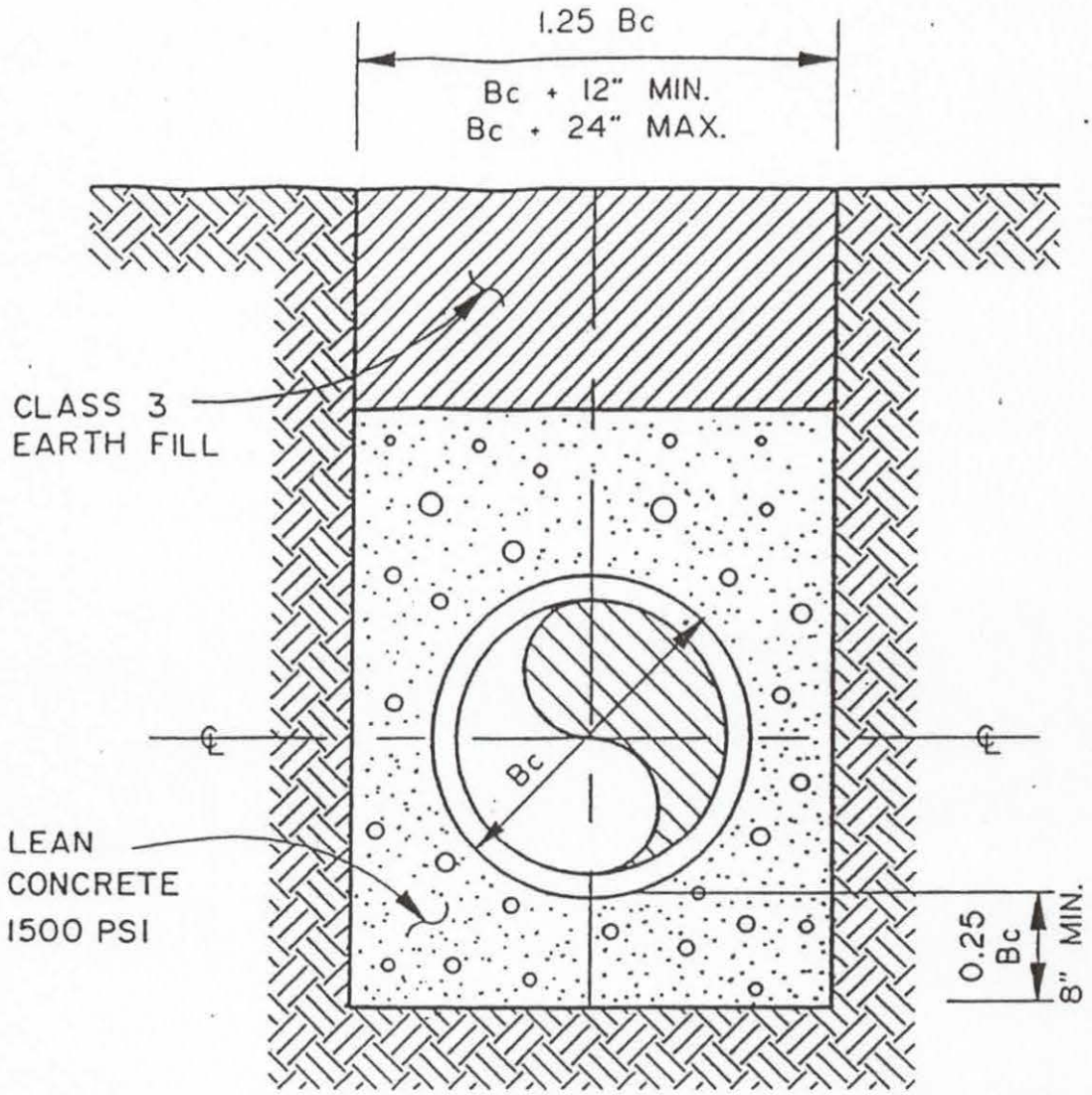

TRENCH TYPE A

N.T.S.

EXAMPLE USEAGES OF TRENCH TYPE A PIPE BEDDING AND BACKFILL

1. PIPE IS TO BE CONSTRUCTED UNDER AREAS SUBJECTED TO HEAVY LOADS.
2. PIPE IS TO BE CONSTRUCTED CLOSE TO OTHER PIPING.
3. PIPE IS TO BE CONSTRUCTED CLOSE TO STRUCTURES.

NOTE:
1. REFER TO PLATE 1 FOR GENERAL TRENCH NOTES AND TRENCH BACKFILL DENSITY AND MOISTURE REQUIREMENTS.
2. REFER TO PLATE 1 FOR AGGREGATE FILL MATERIAL CLASSIFICATIONS FOR VARIOUS PIPE MATERIALS.
3. THE ABOVE PIPE BEDDING AND BACKFILL DETAILS ARE MINIMUM GUIDELINES AND THE DESIGN ENGINEER SHALL BE RESPONSIBLE FOR SPECIFYING THE APPROPRIATE DETAILS FOR THE DESIGN CONDITION BEING CONSIDERED.

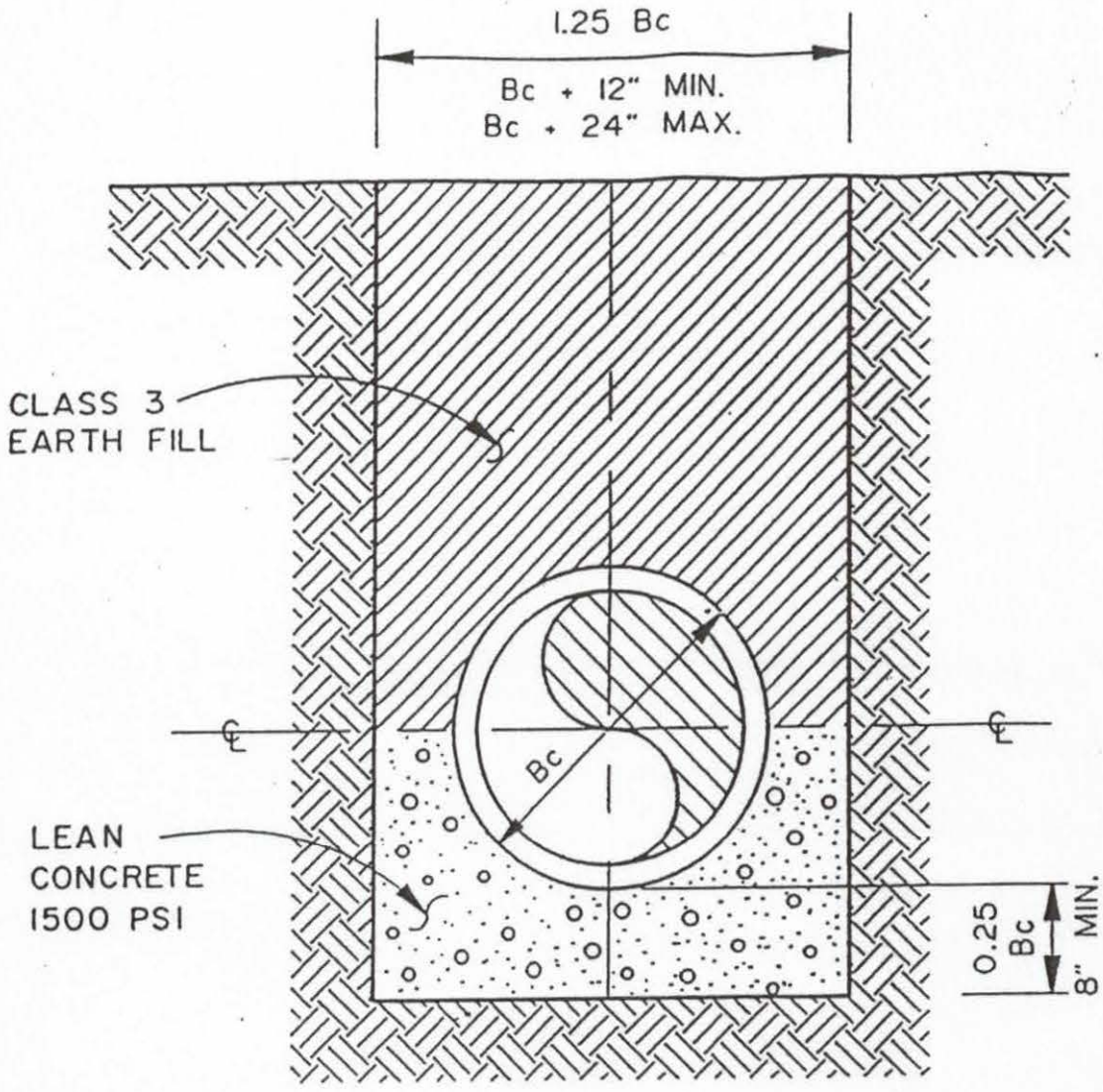

TRENCH TYPE B

N.T.S.

EXAMPLE USEAGES OF TRENCH TYPE B PIPE BEDDING AND BACKFILL

1. PIPE IS TO BE CONSTRUCTED UNDER AREAS SUBJECTED TO HEAVY LOADS.
2. PIPE IS TO BE CONSTRUCTED WHEN PERVIOUS BEDDING IS NOT DESIRED.
3. PIPE IS TO BE CONSTRUCTED IN CLOSE VICINITY OVER AN EXISTING PIPE.

NOTE:
1. REFER TO PLATE I FOR GENERAL TRENCH NOTES AND TRENCH BACKFILL DENSITY AND MOISTURE REQUIREMENTS.
2. REFER TO PLATE I FOR AGGREGATE FILL MATERIAL CLASSIFICATIONS FOR VARIOUS PIPE MATERIALS.
3. THE ABOVE PIPE BEDDING AND BACKFILL DETAILS ARE MINIMUM GUIDELINES AND THE DESIGN ENGINEER SHALL BE RESPONSIBLE FOR SPECIFYING THE APPROPRIATE DETAILS FOR THE DESIGN CONDITION BEING CONSIDERED.

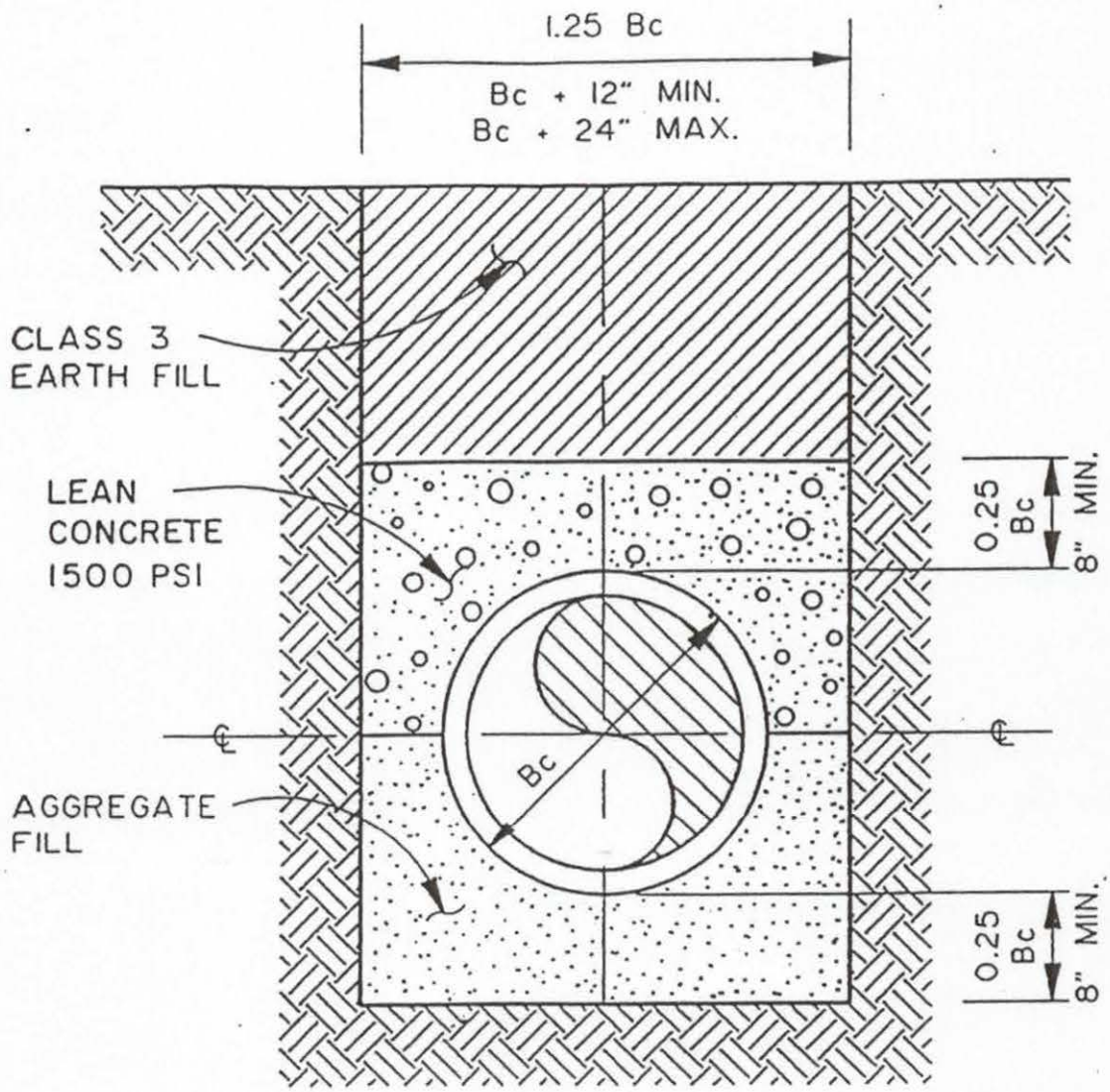

TRENCH TYPE C

N.T.S.

EXAMPLE USEAGES OF TRENCH TYPE C PIPE BEDDING AND BACKFILL

1. PIPE IS TO BE CONSTRUCTED UNDER ANOTHER PIPE.

NOTE:
1. REFER TO PLATE 1 FOR GENERAL TRENCH NOTES AND TRENCH BACKFILL DENSITY AND MOISTURE REQUIREMENTS.
2. REFER TO PLATE 1 FOR AGGREGATE FILL MATERIAL CLASSIFICATIONS FOR VARIOUS PIPE MATERIALS.
3. THE ABOVE PIPE BEDDING AND BACKFILL DETAILS ARE MINIMUM GUIDELINES AND THE DESIGN ENGINEER SHALL BE RESPONSIBLE FOR SPECIFYING THE APPROPRIATE DETAILS FOR THE DESIGN CONDITION BEING CONSIDERED.

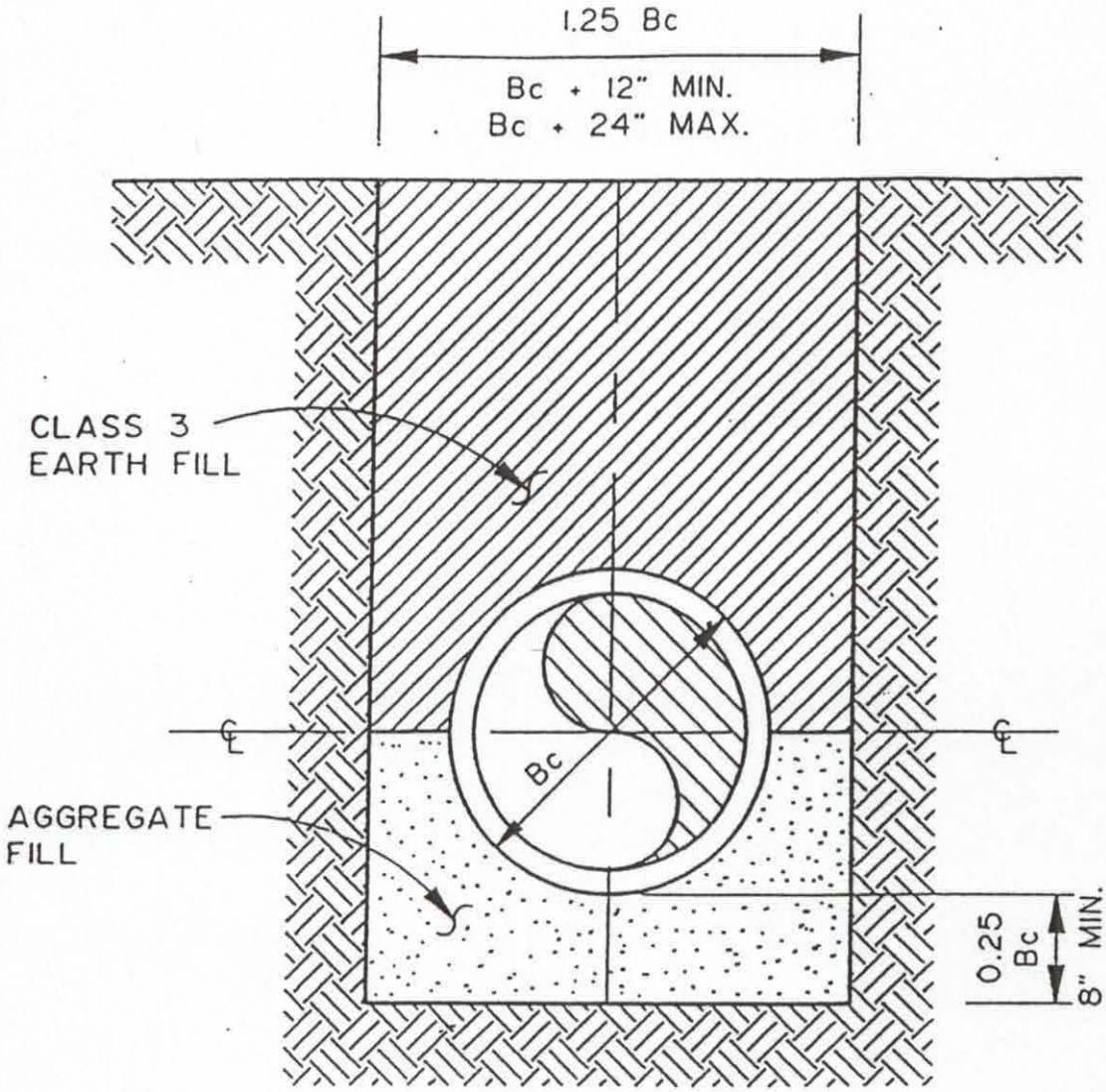

TRENCH TYPE D

N.T.S.

EXAMPLE USEAGES OF TRENCH TYPE D PIPE BEDDING AND BACKFILL

1. STANDARD PIPE INSTALLATION WHEN PIPE IS NOT CONSTRUCTED UNDER A ROADWAY.
2. WHEN THERE IS NO CONCERN IF WATER PASSES DOWN THROUGH THE BACKFILL.

NOTE:
1. REFER TO PLATE 1 FOR GENERAL TRENCH NOTES AND TRENCH BACKFILL DENSITY AND MOISTURE REQUIREMENTS.
2. REFER TO PLATE 1 FOR AGGREGATE FILL MATERIAL CLASSIFICATIONS FOR VARIOUS PIPE MATERIALS.
3. THE ABOVE PIPE BEDDING AND BACKFILL DETAILS ARE MINIMUM GUIDELINES AND THE DESIGN ENGINEER SHALL BE RESPONSIBLE FOR SPECIFYING THE APPROPRIATE DETAILS FOR THE DESIGN CONDITION BEING CONSIDERED.

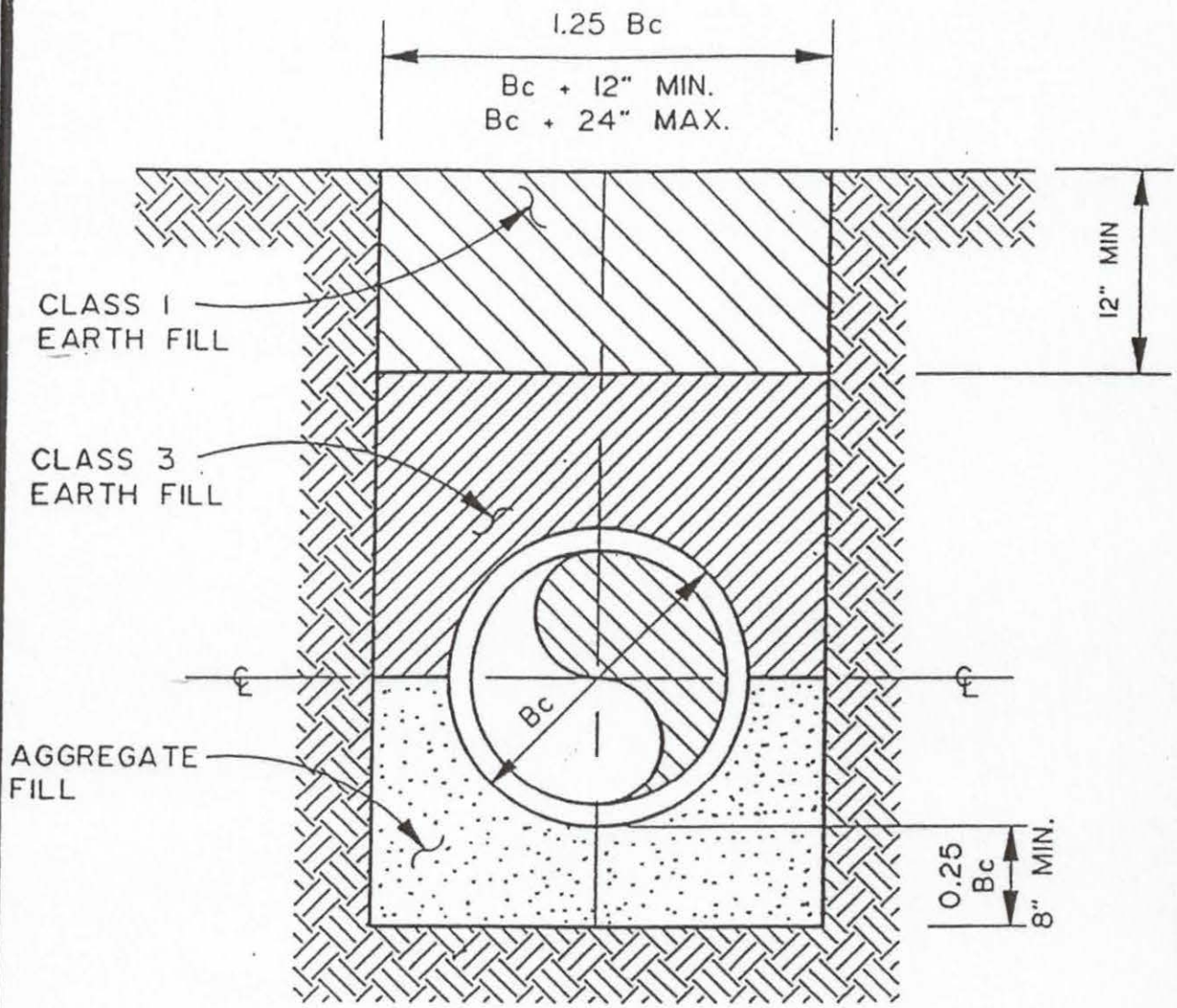

TRENCH TYPE E

N.T.S.

EXAMPLE USEAGES OF TRENCH TYPE E PIPE BEDDING AND BACKFILL

1. STANDARD PIPE INSTALLATION WHEN PIPE IS NOT CONSTRUCTED UNDER A ROADWAY.
2. WHEN WATER SHOULD NOT PASS DOWN THROUGH THE BACKFILL.

NOTE:
1. REFER TO PLATE I FOR GENERAL TRENCH NOTES AND TRENCH BACKFILL DENSITY AND MOISTURE REQUIREMENTS.
2. REFER TO PLATE I FOR AGGREGATE FILL MATERIAL CLASSIFICATIONS FOR VARIOUS PIPE MATERIALS.
3. THE ABOVE PIPE BEDDING AND BACKFILL DETAILS ARE MINIMUM GUIDELINES AND THE DESIGN ENGINEER SHALL BE RESPONSIBLE FOR SPECIFYING THE APPROPRIATE DETAILS FOR THE DESIGN CONDITION BEING CONSIDERED.

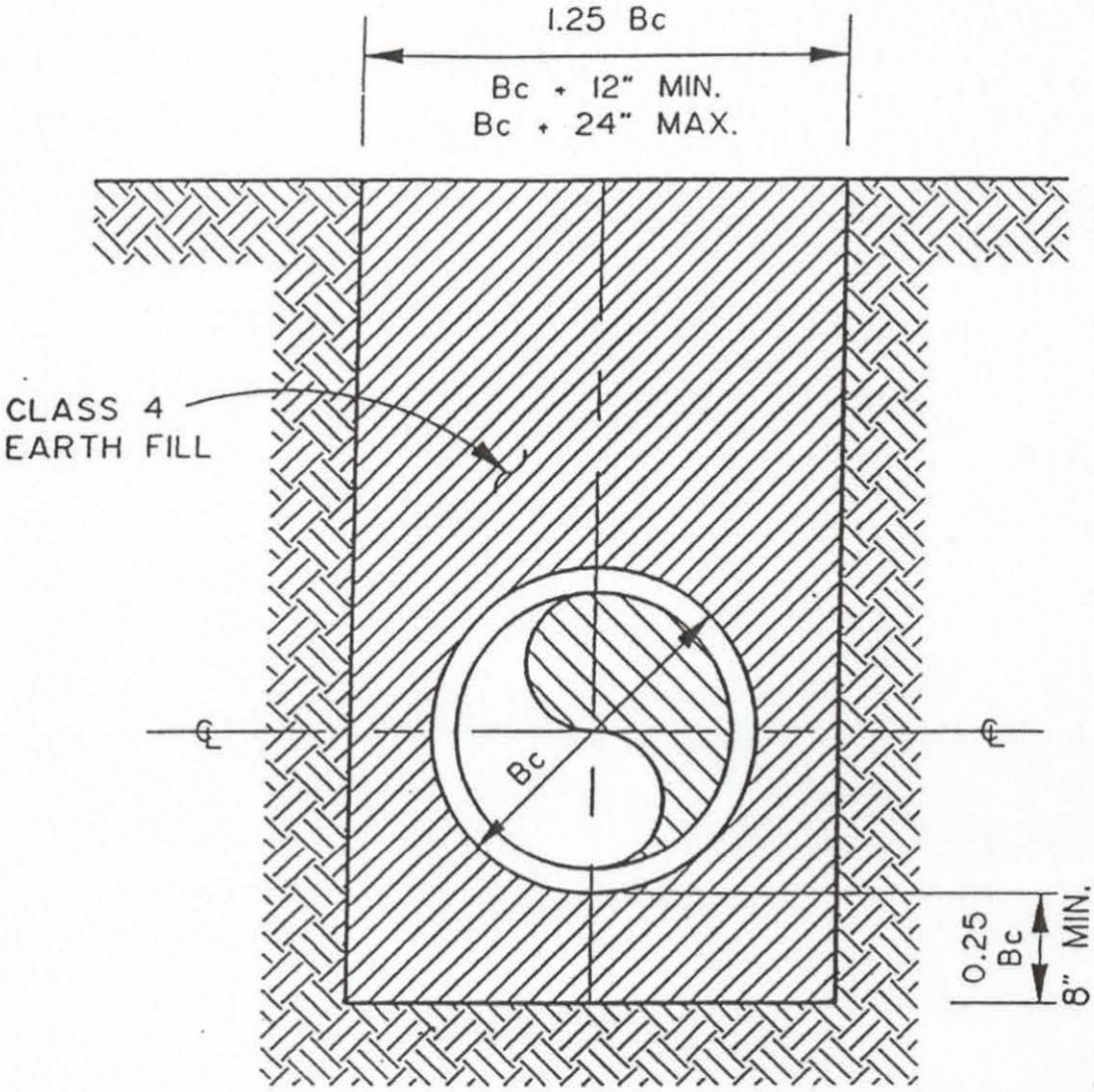

TRENCH TYPE F

N.T.S.

EXAMPLE USEAGES OF TRENCH TYPE F PIPE BEDDING AND BACKFILL

1. PIPE IS TO BE CONSTRUCTED THROUGH AN AREA CONSISTING OF SELECT BACKFILL MATERIAL.
2. PIPE IS TO BE CONSTRUCTED IN AN AREA WHERE THERE ARE NO STRICK BACKFILL REQUIREMENTS.

NOTE:
1. REFER TO PLATE I FOR GENERAL TRENCH NOTES AND TRENCH BACKFILL DENSITY AND MOISTURE REQUIREMENTS.
2. REFER TO PLATE I FOR AGGREGATE FILL MATERIAL CLASSIFICATIONS FOR VARIOUS PIPE MATERIALS.
3. THE ABOVE PIPE BEDDING AND BACKFILL DETAILS ARE MINIMUM GUIDELINES AND THE DESIGN ENGINEER SHALL BE RESPONSIBLE FOR SPECIFYING THE APPROPRIATE DETAILS FOR THE DESIGN CONDITION BEING CONSIDERED.

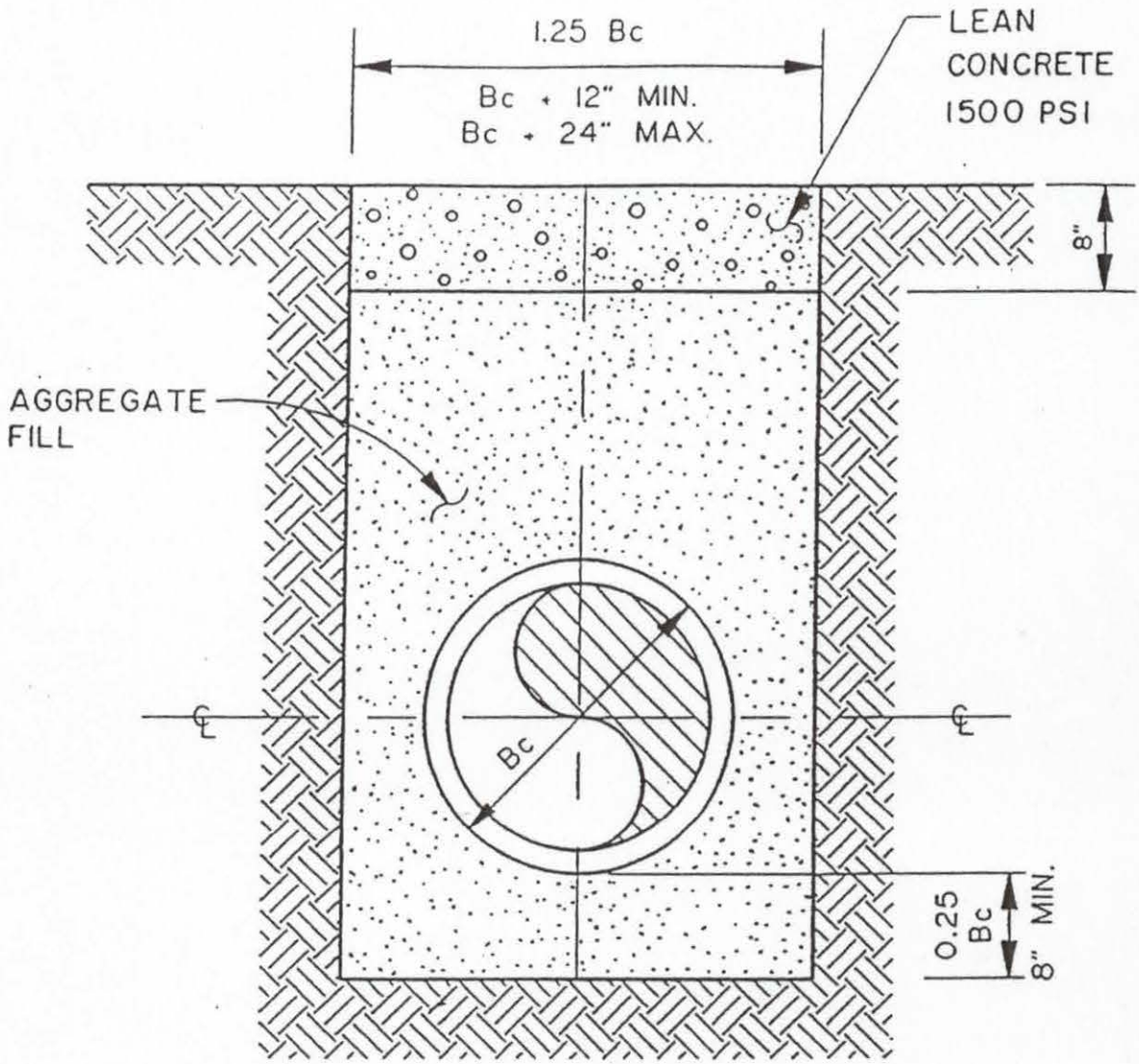

TRENCH TYPE G

N.T.S.

EXAMPLE USEAGES OF TRENCH TYPE G PIPE BEDDING AND BACKFILL

1. PIPE IS TO BE CONSTRUCTED UNDER A ROADWAY.

NOTE:
1. REFER TO PLATE 1 FOR GENERAL TRENCH NOTES AND TRENCH BACKFILL DENSITY AND MOISTURE REQUIREMENTS.
2. REFER TO PLATE 1 FOR AGGREGATE FILL MATERIAL CLASSIFICATIONS FOR VARIOUS PIPE MATERIALS.
3. THE ABOVE PIPE BEDDING AND BACKFILL DETAILS ARE MINIMUM GUIDELINES AND THE DESIGN ENGINEER SHALL BE RESPONSIBLE FOR SPECIFYING THE APPROPRIATE DETAILS FOR THE DESIGN CONDITION BEING CONSIDERED.

APPENDIX B

ENGINEERING CHARTS AND REFERENCE DATA

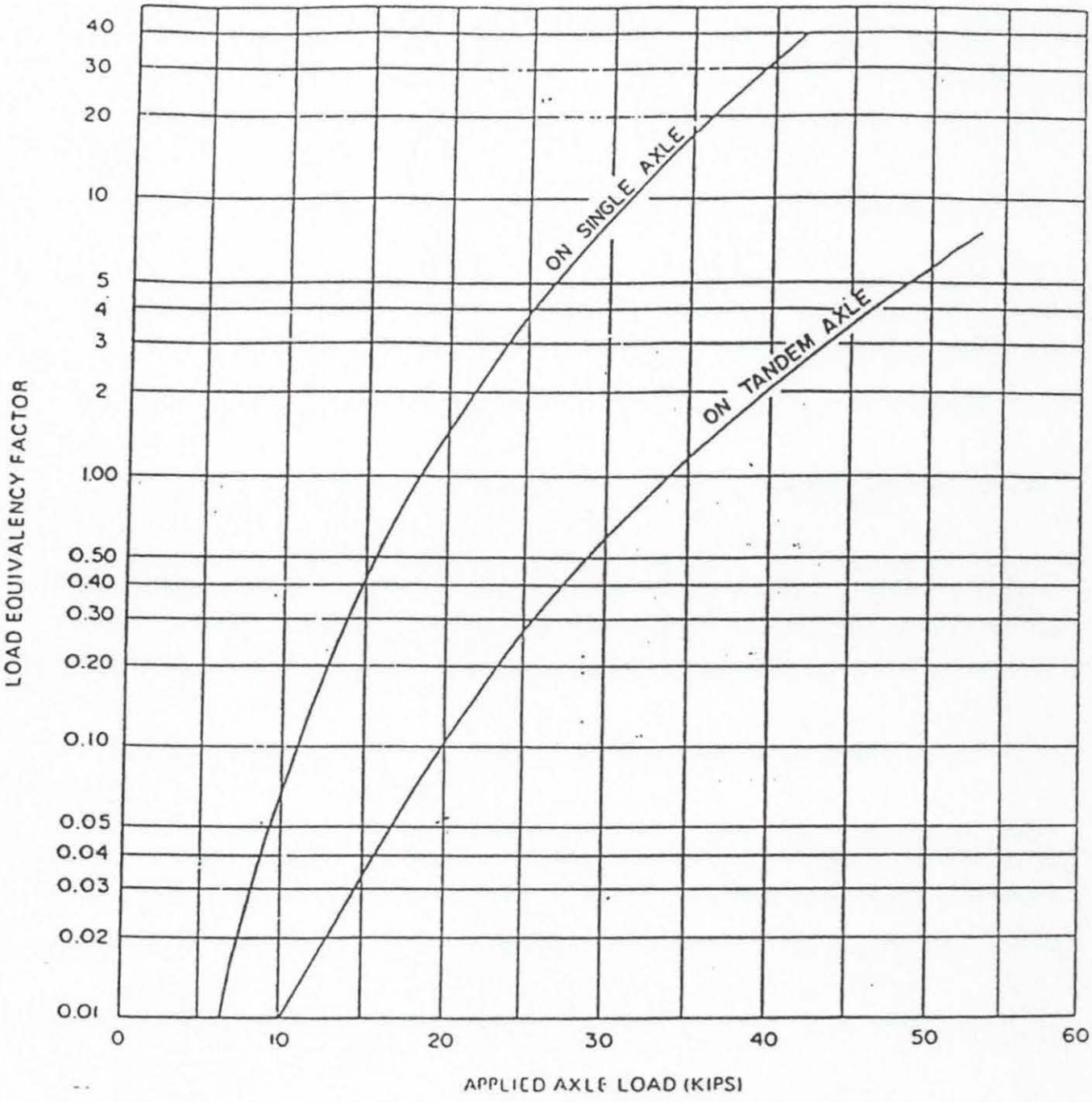

FIGURE I

RELATIONSHIP BETWEEN AXLE LOADS OF VARIOUS MAGNITUDES AND THE BASIC 18 KIP, SINGLE AXLE, DUAL TIRE LOAD.

TAKEN FROM NATIONAL STONE ASSOCIATION'S, FLEXIBLE PAVEMENT

DESIGN GUIDE FOR ROADS AND STREETS, FOURTH EDITION JANUARY, 1985

Thickness Design Chart

(from U.S. Army Engineers Manual TM 5-822-5, 1965, reproduced by permission)

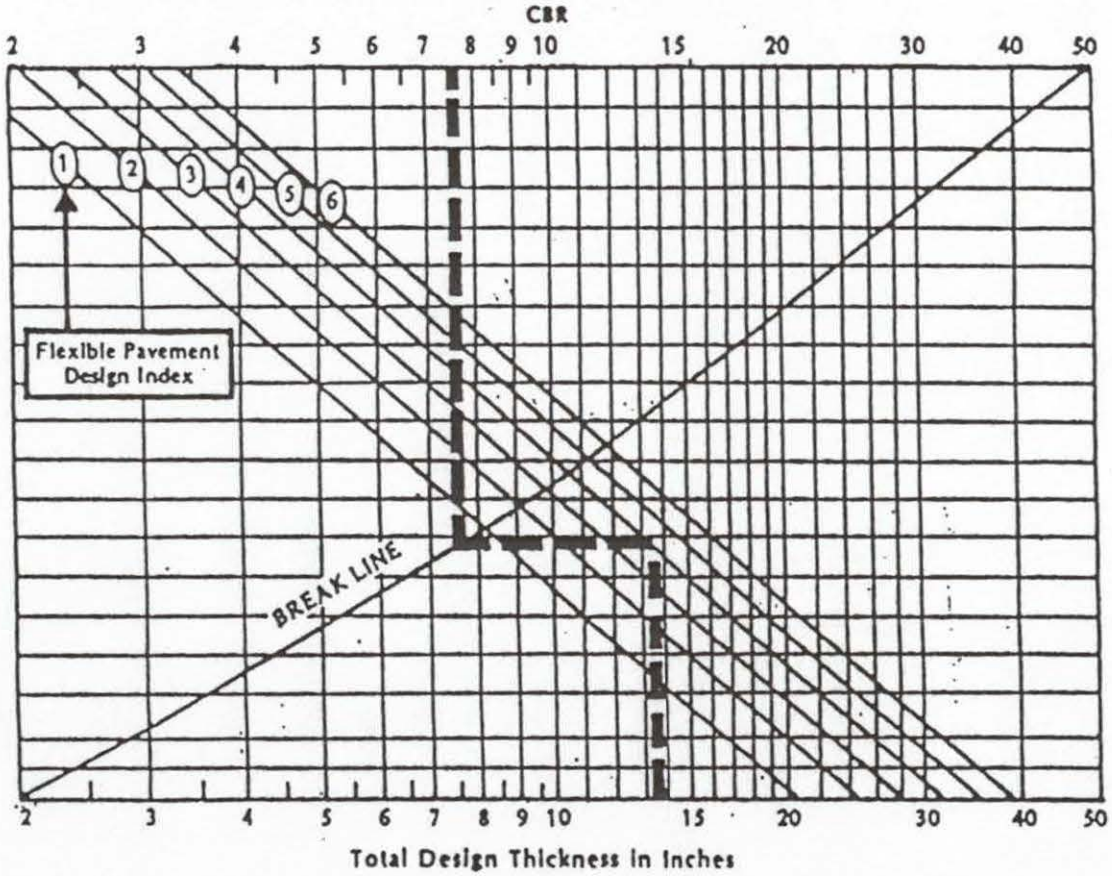

FIGURE 2

TAKEN FROM NATIONAL STONE ASSOCIATION'S, "DESIGN GUIDE FOR PERMAMENT PARKING AREAS", FOURTH EDITION, JUNE,1979

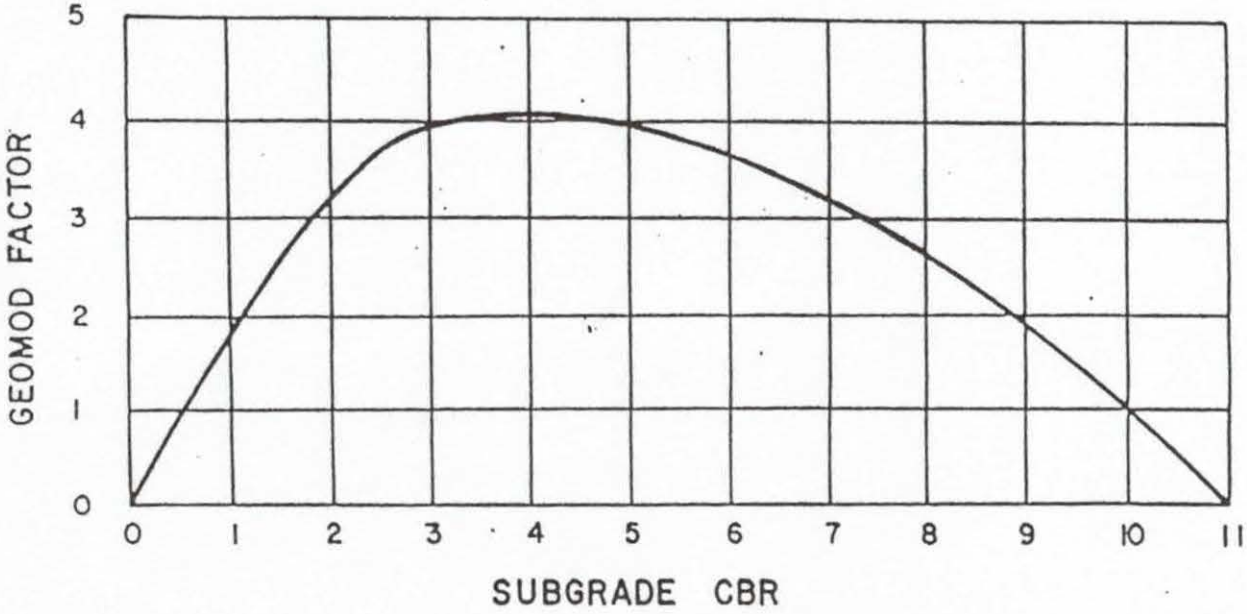

FIG. 3 -IDEALIZED GEOMOD CBR CURVE

TAKEN FROM "DESIGN OF FLEXIBLE PAVEMENTS WITH GEOTEXTILES", BY GARRY H. GREGORY, P.E., PRESENTED TO A.S.C.E. FALL MEETING TECHNICAL SESSION, HOUSTON, TEXAS, OCTOBER 2, 1987

References

1. Portland Cement Association, *Thickness Design for Concrete Highway and Street Pavement*, 1984.

2. Gregory, Garry H., P.E., "Design of Flexible Pavements with Geotextiles", Presented at the American Society of Civil Engineers, Fall Meeting, Geotechnical Session, Houston, Texas, October 2, 1987.

3. Yoder, E.J., and M.W. Witczak, 1975, *Principles of Pavement Design*, 2nd Edition, p. 44-109, available from, a Wiley-Interscience Publication, John Wiley & Son, Inc.

4. National Stone Association, *Flexible Pavement Design Guide for Roads and Streets*, January, 1985, 4th Edition.

5. National Stone Association, *Design Guide for Parking Areas*, 5th Edition, available from National Stone Association, 1415 Elliot Place, N.W., Washington, D.C. 2007, (202)342-1100.

6. State Department of Highways and Public Transportation, *Standard Specifications for Construction of Highways, Streets, and Bridges*.

7. Brater, Ernest F., and King, Horace Williams, 1976, *Handbook of Hydraulics for the Solution of Hydraulic Engineering Problems*, 6th Edition, p. 4-3, 5-11, and 5-15, McGraw-Hill Book Company.

8. Texas State Department of Highways and Public Transportation, Bridge Division, *Hydraulic Manual*, 3rd Edition, December 1988, Chapter 2, Table 6.

9. Houston, Franklin C., P.E., "Simplified Sizing of Small Urban Detention Ponds", presented at the 1983 International Symposium on Urban Hydrology, Hydraulics and Sediment Control, University of Kentucky.