NOTE:
ALL UTILITIES MAY NOT BE SHOWN ON THE PLANS. LOCATION OF EXISTING UTILITIES SHOWN ARE APPROXIMATE AND ARE BASED ON INFORMATION FROM PUBLIC RECORDS AND SOME FIELD VERIFICATION.

50 LF OF CONCRETE CURB & GUTTER REPAIR

900 LF OF TEMPORARY ASPHALT REPAIR

SS-3
REMOVE AND DISPOSE OF 182 L.F. OF EXISTING 6" SEWER AND INSTALL 182 L.F. OF NEW 6" SEWER LINE

STA 6+82.10 ~ SS-1
REMOVE EXISTING MANHOLE
CONSTRUCT NEW 4.0' DIA.
TOP MH = 981.30
APPROX. ℄ 6" = 978.29

STA 7+64.70 ~ SS-1
REMOVE EXISTING MANHOLE
CONSTRUCT NEW 4.0' DIA.
TOP MH = 980.40
APPROX. ℄ 6" = 977.33
REMOVE AND REPLACE
30 L.F. 6" SEWER TO WEST

STA 7+78.20 ~ WL-1
INSTALL:
1 ~ 6" x 6" TEE
1 ~ 6" x 4" TEE
1 ~ 6" GATE VALVE
CONNECT TO EXIST. 4" W.L.

REPRESENTS SHORT WATER SERVICE. INCLUDES SADDLE TAP AND 10 L.F. OF 3/4" SERVICE LINE BY METHOD OF OPEN CUT.

REPRESENTS LONG WATER SERVICE. INCLUDES SADDLE TAP AND 40 L.F. OF 3/4" SERVICE LINE BY METHOD OF BORE OR MISSLE.

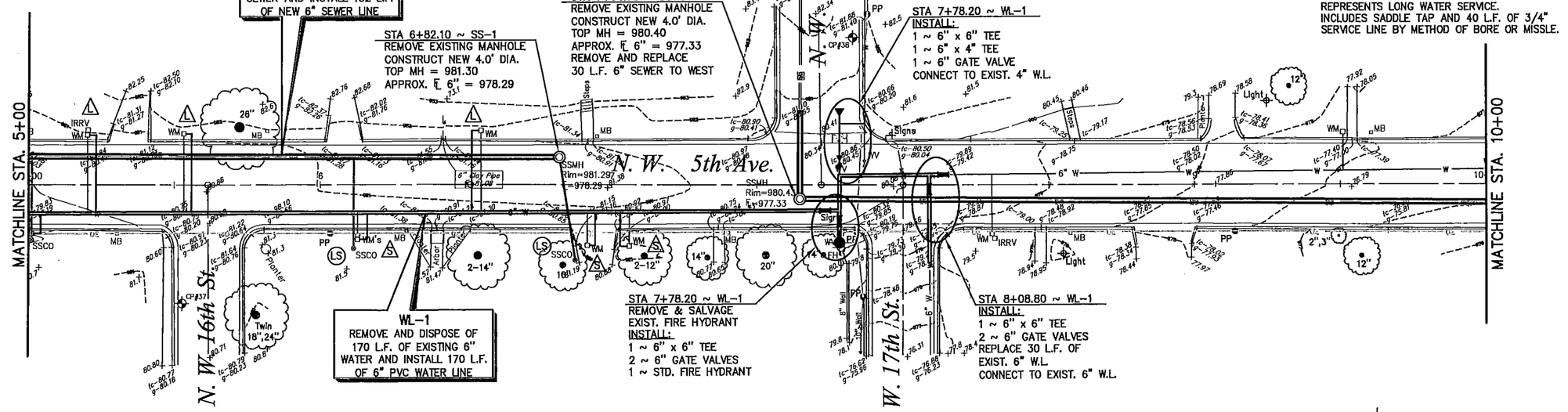

STA 7+78.20 ~ WL-1
REMOVE & SALVAGE
EXIST. FIRE HYDRANT
INSTALL:
1 ~ 6" x 6" TEE
2 ~ 6" GATE VALVES
1 ~ STD. FIRE HYDRANT

WL-1
REMOVE AND DISPOSE OF 170 L.F. OF EXISTING 6" WATER AND INSTALL 170 L.F. OF 6" PVC WATER LINE

STA 8+08.80 ~ WL-1
INSTALL:
1 ~ 6" x 6" TEE
2 ~ 6" GATE VALVES
REPLACE 30 L.F. OF EXIST. 6" W.L.
CONNECT TO EXIST. 6" W.L.

THE EXISTING 6" WATER LINE WILL BE OUT OF SERVICE DURING THE CONSTRUCTION OF THE PROPOSED 6" WATER LINE.

THE CONTRACTOR SHALL INSTALL TEMPORARY 2" WATER LINES ALONG EACH SIDE OF N.W. 5th AVENUE. TO PROVIDE SERVICE TO EACH METER CONNECTION.

THE CONTRACTOR MAY ELECT TO LIMIT THE AMOUNT OF TEMPORARY 2" WATER LINE BY INSTALLING THE NEW 6" WATER LINE IN TWO STAGES; N.W. 7TH AVE. TO N.W 15th STREET AND N.W 15th STREET TO N.W. 17th STREET

(LS) LONG SEWER SERVICE
INCLUDES 6" X 4" SERVICE WYE, 40 L.F. OF 4" PVC, 4" CLEAN-OUT AND CONNECTION TO EXISTING SEWER SERVICE YARD LINE.

(SS) SHORT SEWER SERVICE
INCLUDES 6" X 4" SERVICE WYE, 10 L.F. OF 4" PVC, 4" CLEAN-OUT AND CONNECTION TO EXISTING SEWER SERVICE YARD LINE.

N

0 10 20 40 60
GRAPHIC SCALE IN FEET

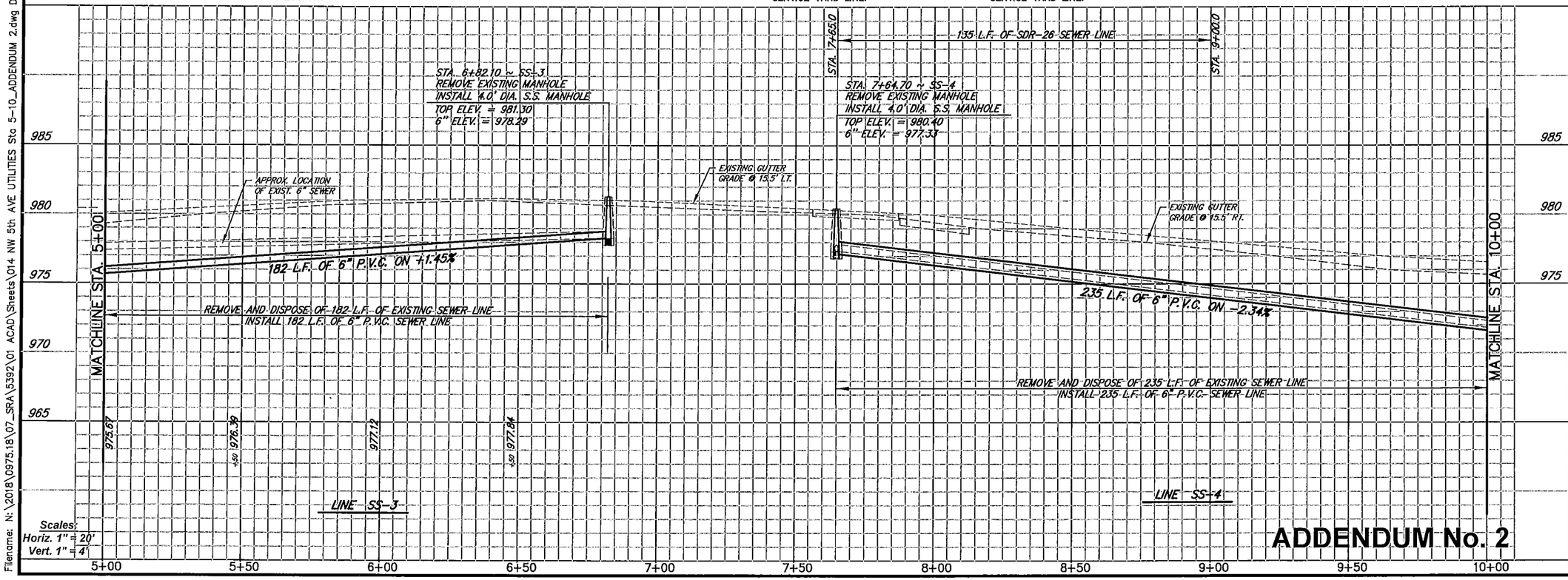

Scales:
Horiz. 1" = 20'
Vert. 1" = 4'

ADDENDUM No. 2

SCHRICKEL ROLLINS
PARKHILL SMITH & COOPER
TBAE # BR 743 · TBPE # F-560 · TBPLS # 10194091
255 N. Center Street
Suite 200
Arlington, Texas 76011
Phone: 817.649.3216
Metro: 817.640.8212
Fax: 817.649.7645

LEGEND

EX. POWER POLE	PP
SAN. SEW. MANHOLE	SSMH
EX. WATER VALVE	WV
EX. WATER METER	WM
EX. FIRE HYDRANT	FH
EX. GAS METER	GM
EX. TELEPHONE RISER	TR
EX. FENCE	—x—
EX. SEWER LINE	—ss—
EX. GAS LINE	—w—
EX. GAS LINE	—G—
EX. TREE	

City of MINERAL WELLS TEXAS

UTILITY IMPROVEMENTS
S.W. 4th Avenue
N.W. 5th Avenue
N.W.13th Street
N.W.15th Street
N.E. 10th Street
S.W.15th Street

SANFORD P. LaHUE JR. 61619 REGISTERED PROFESSIONAL ENGINEER TEXAS
10/15/19

DATE:	October 2019
REVISED:	
STATUS:	BID
DESIGN BY:	S.P.L.
DRAWN BY:	R.J.S.
JOB No.	0975.18 (SRA 5392)

PROJECT NAME:
2019 UTILITIES IMPROVEMENTS

N.W. 5th AVENUE UTILITIES
Plan - Profile
Sta. 5+00 to Sta. 10+00

BAR IS ONE INCH LONG ON ORIGINAL DRAWING. CHECK SCALE AND ADJUST ACCORDINGLY.
1"

SHEET No.
14

Filename: N:\2018\0975.18\07_SRA\5392\01 ACAD\Sheets\014 NW 5th AVE UTILITIES Sta 5-10_ADDENDUM 2.dwg Date: 11/19/19 User: Sanford Lahue

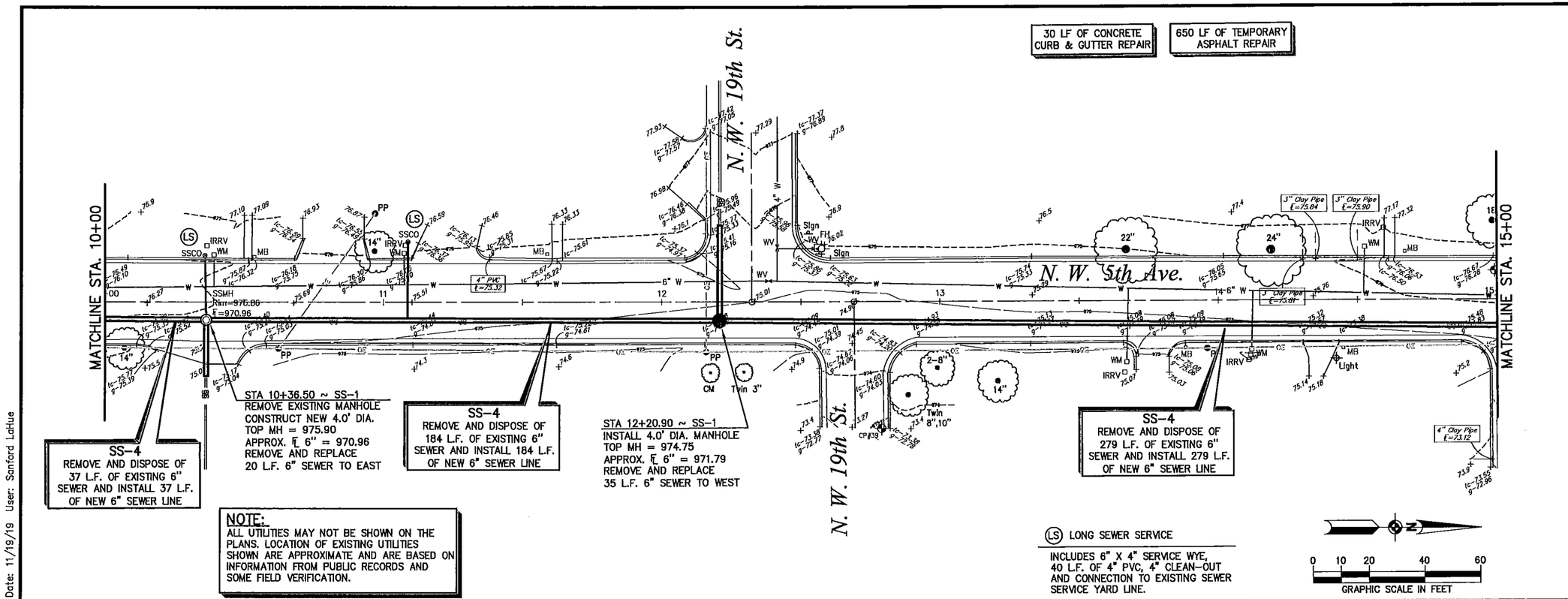

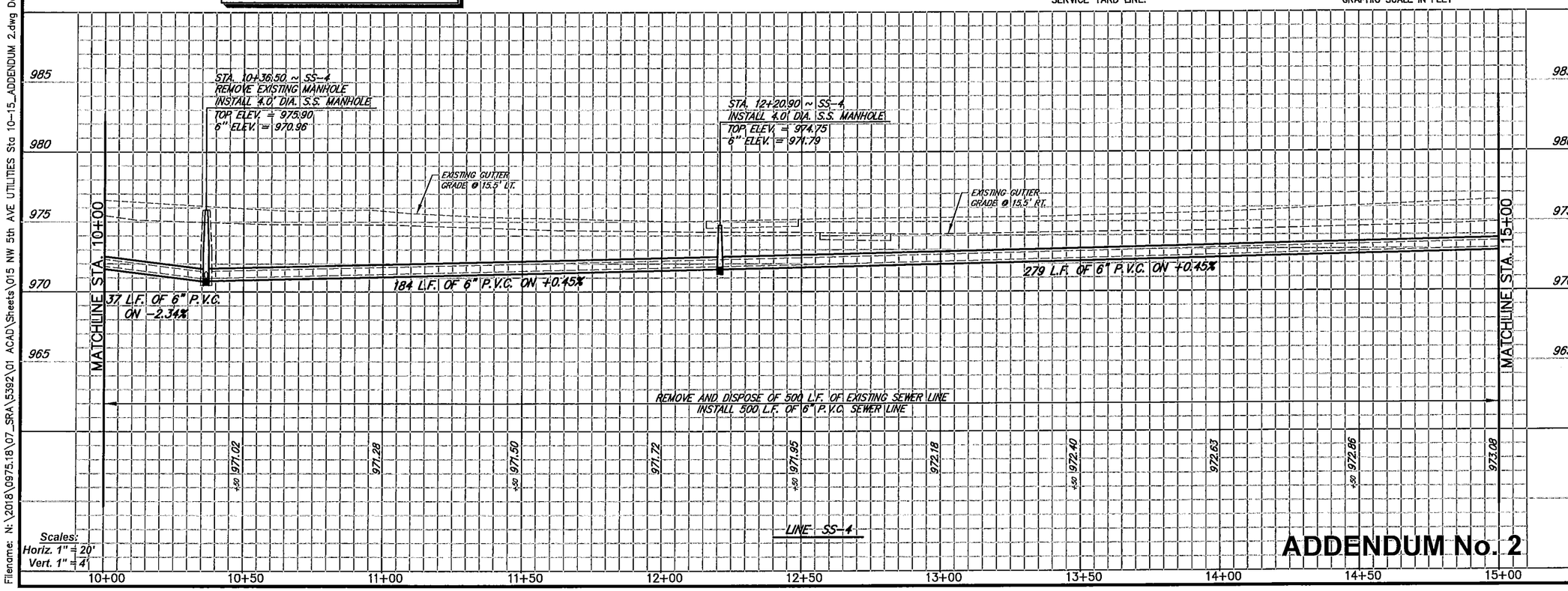

ADDENDUM No. 2

SCHRICKEL ROLLINS
PARKHILLSMITH&COOPER
TBAE # BR 743 · TBPE # F-560 · TBPLS # 10194091
255 N. Center Street
Suite 200
Arlington, Texas 76011
Phone: 817.649.3216
Metro: 817.640.8212
Fax: 817.649.7645

LEGEND

EX. POWER POLE	PP
SAN. SEW. MANHOLE	SSMH
EX. WATER VALVE	WV
EX. WATER METER	WM
EX. FIRE HYDRANT	FH
EX. GAS METER	GM
EX. TELEPHONE RISER	TR
EX. FENCE	—x—
EX. SEWER LINE	—ss—
EX. GAS LINE	—w—
EX. GAS LINE	—G—
EX. TREE	

City of MINERAL WELLS TEXAS

UTILITY IMPROVEMENTS

S.W. 4th Avenue
N.W. 5th Avenue
N.W.13th Street
N.W.15th Street
N.E. 10th Street
S.W.15th Street

SANFORD P. LaRUE JR. 61619 REGISTERED PROFESSIONAL ENGINEER TEXAS
10/15/19

DATE:	October 2019
REVISED:	
STATUS:	BID
DESIGN BY:	S.P.L.
DRAWN BY:	R.J.S.
JOB No.	0975.18 (SRA 5392)

PROJECT NAME:
2019 UTILITIES IMPROVEMENTS

N.W. 5th AVENUE UTILITIES
Plan - Profile
Sta. 10+00 to Sta. 15+00

BAR IS ONE INCH LONG ON ORIGINAL DRAWING. CHECK SCALE AND ADJUST ACCORDINGLY.
1"

SHEET No.
15

Filename: N:\2018\0975.18\07_SRA\5392\01 ACAD\Sheets\015 NW 5th AVE UTILITIES Sta 10-15_ADDENDUM 2.dwg Date: 11/19/19 User: Sanford LaRue

NOTE:
ALL UTILITIES MAY NOT BE SHOWN ON THE PLANS. LOCATION OF EXISTING UTILITIES SHOWN ARE APPROXIMATE AND ARE BASED ON INFORMATION FROM PUBLIC RECORDS AND SOME FIELD VERIFICATION.

25 LF OF CONCRETE CURB & GUTTER REPAIR

660 LF OF TEMPORARY ASPHALT REPAIR

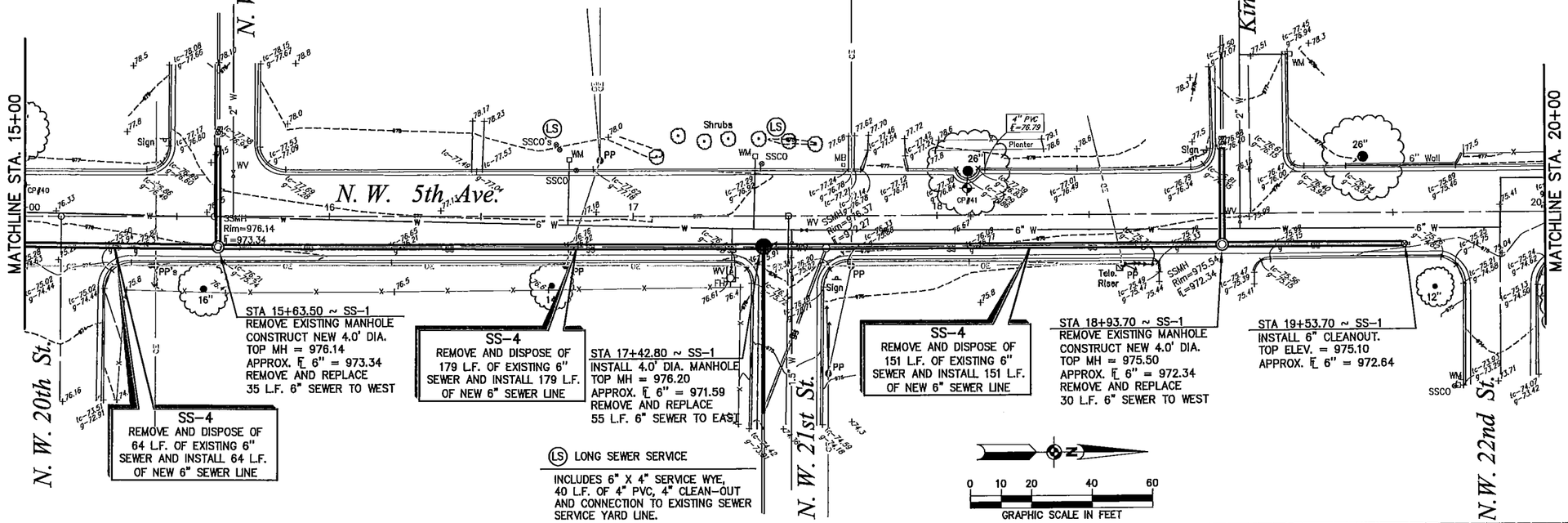

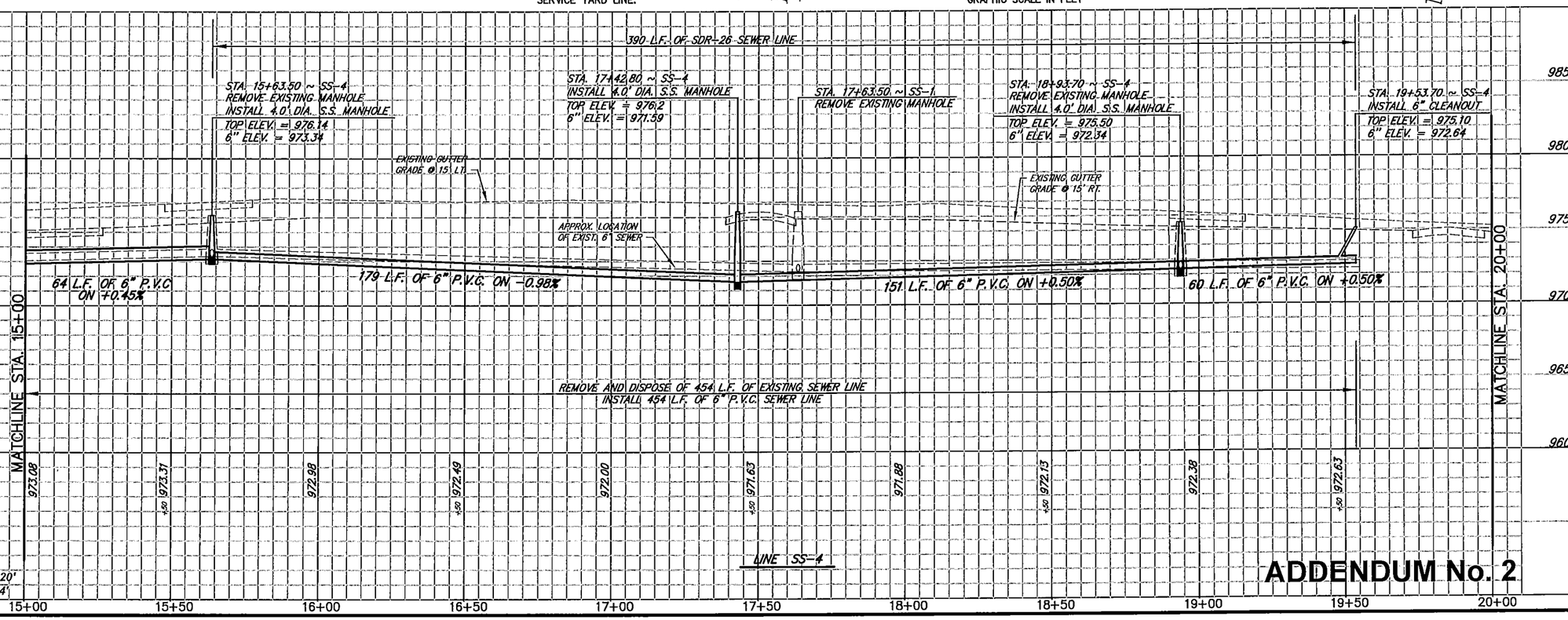

Scales:
Horiz. 1" = 20'
Vert. 1" = 4'

ADDENDUM No. 2

SCHRICKEL ROLLINS
PARKHILL SMITH & COOPER
TBAE # BR 743 · TBPE # F-560 · TBPLS # 10194091
255 N. Center Street
Suite 200
Arlington, Texas 76011
Phone: 817.649.3216
Metro: 817.640.8212
Fax: 817.649.7645

LEGEND

EX. POWER POLE	PP
SAN. SEW. MANHOLE	SSMH
EX. WATER VALVE	WV
EX. WATER METER	WM
EX. FIRE HYDRANT	FH
EX. GAS METER	GM
EX. TELEPHONE RISER	TR
EX. FENCE	X
EX. SEWER LINE	SS
EX. GAS LINE	W
EX. GAS LINE	G
EX. TREE	

City of MINERAL WELLS TEXAS

UTILITY IMPROVEMENTS
S.W. 4th Avenue
N.W. 5th Avenue
N.W.13th Street
N.W.15th Street
N.E. 10th Street
S.W.15th Street

SANFORD P. LaHUE JR. 61619 REGISTERED PROFESSIONAL ENGINEER 10/15/19

DATE:	October 2019
REVISED:	
STATUS:	BID
DESIGN BY:	S.P.L.
DRAWN BY:	R.J.S.
JOB No.	0975.18 (SRA 5392)

PROJECT NAME:
2019 UTILITIES IMPROVEMENTS

N.W. 5th AVENUE UTILITIES
Plan - Profile
Sta. 15+00 to Sta. 20+00

BAR IS ONE INCH LONG ON ORIGINAL DRAWING. CHECK SCALE AND ADJUST ACCORDINGLY.
1"

SHEET No.
16

Filename: N:\2018\0975.18\07_SRA\5392\01 ACAD\Sheets\016 NW 5th AVE UTILITIES Sta 15-20_ADDENDUM 2.dwg Date: 11/19/19 User: Sanford LaHue

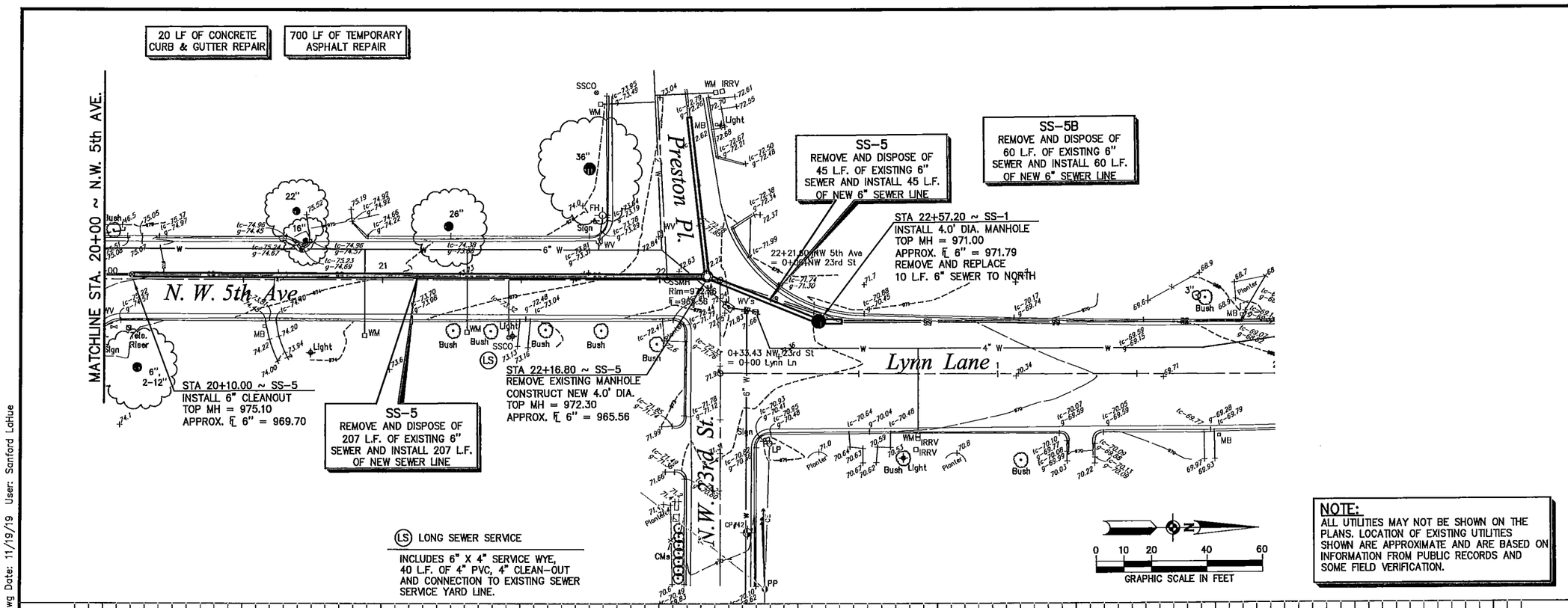

NOTE:
ALL UTILITIES MAY NOT BE SHOWN ON THE PLANS. LOCATION OF EXISTING UTILITIES SHOWN ARE APPROXIMATE AND ARE BASED ON INFORMATION FROM PUBLIC RECORDS AND SOME FIELD VERIFICATION.

SCHRICKEL ROLLINS
PARKHILLSMITH&COOPER
TBAE # BR 743 · TBPE # F-560 · TBPLS # 10194091
255 N. Center Street
Suite 200
Arlington, Texas 76011
Phone: 817.649.3216
Metro: 817.640.8212
Fax: 817.649.7645

LEGEND

EX. POWER POLE	PP
SAN. SEW. MANHOLE	SSMH
EX. WATER VALVE	WV
EX. WATER METER	WM
EX. FIRE HYDRANT	FH
EX. GAS METER	GM
EX. TELEPHONE RISER	TR
EX. FENCE	X
EX. SEWER LINE	SS
EX. GAS LINE	W
EX. GAS LINE	G
EX. TREE	

City of MINERAL WELLS TEXAS

UTILITY IMPROVEMENTS
S.W. 4th Avenue
N.W. 5th Avenue
N.W.13th Street
N.W.15th Street
N.E. 10th Street
S.W.15th Street

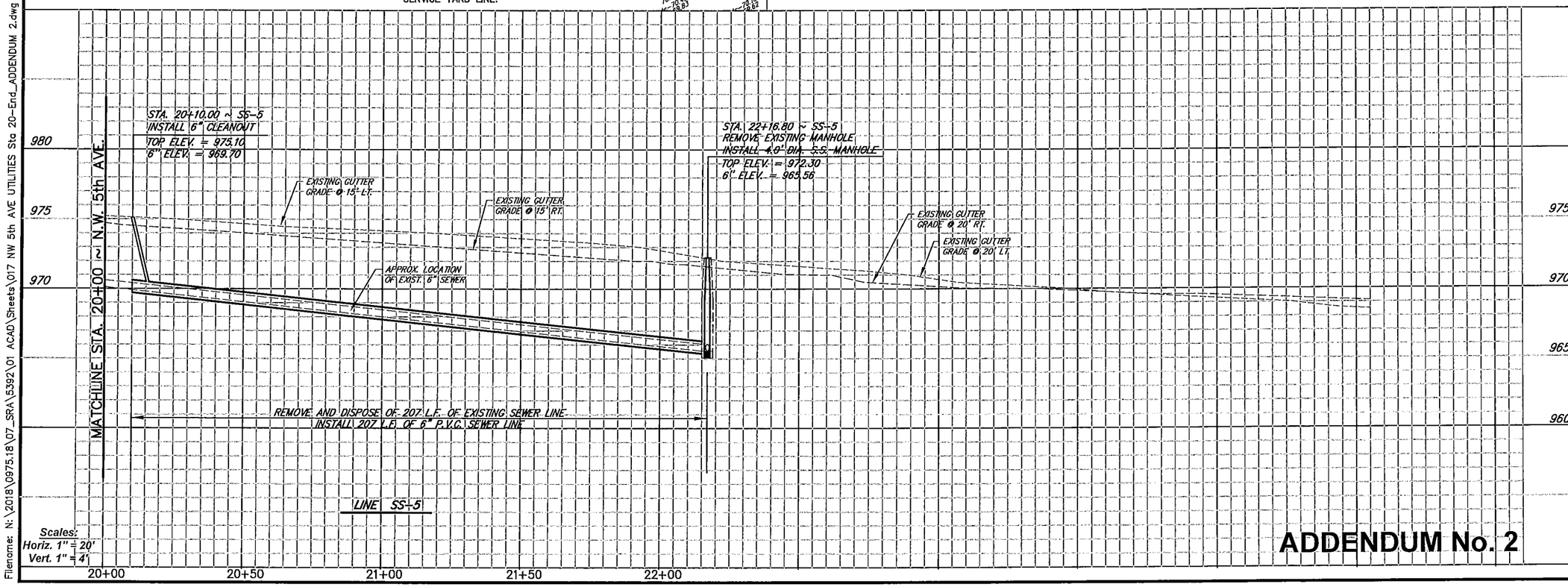

SANFORD P. LaHUE JR. 61619 REGISTERED PROFESSIONAL ENGINEER 10/15/19

DATE:	October 2019
REVISED:	
STATUS:	BID
DESIGN BY:	S.P.L.
DRAWN BY:	R.J.S.
JOB No.	0975.18 (SRA 5392)
PROJECT NAME:	2019 UTILITIES IMPROVEMENTS

N.W. 5th AVENUE UTILITIES
Plan - Profile
Sta. 20+00 to Sta. 22+21

BAR IS ONE INCH LONG ON ORIGINAL DRAWING. CHECK SCALE AND ADJUST ACCORDINGLY.
1"

SHEET No. **17**

ADDENDUM No. 2

Filename: N:\2018\0975.18\07_SRA\5392\01 ACAD\Sheets\017 NW 5th AVE UTILITIES Sta 20-End_ADDENDUM 2.dwg Date: 11/19/19 User: Sanford LaHue